This Manual is Bookmarked

Operating Instructions and Parts Manual
36-inch Metalworking Band Saw
Model VBS-3612

WMH TOOL GROUP

2420 Vantage Drive
Elgin, Illinois 60124
Ph.: 800-274-6848
www.wmhtoolgroup.com

Part No. M-414470A
Revision A1 9/06

Warranty and Service

WMH Tool Group, Inc., warrants every product it sells. If one of our tools needs service or repair, one of our Authorized Service Centers located throughout the United States can give you quick service. In most cases, any of these WMH Tool Group Authorized Service Centers can authorize warranty repair, assist you in obtaining parts, or perform routine maintenance and major repair on your JET® tools. For the name of an Authorized Service Center in your area call 1-800-274-6848.

MORE INFORMATION

WMH Tool Group is consistently adding new products to the line. For complete, up-to-date product information, check with your local WMH Tool Group distributor, or visit jettools.com.

WARRANTY

JET products carry a limited warranty which varies in duration based upon the product (MW = Metalworking, WW = Woodworking).

90 DAY WARRANTY	1 YEAR WARRANTY	2 YEAR WARRANTY			5 YEAR WARRANTY *Warranty reverts to 1 Year Warranty if woodworking (WW) products listed below are used for commercial, industrial or educational purposes*			LIFETIME WARRANTY
Lathe Accessories	Air Tools-Contractor	Body Repair Kits	MW Bandsaws	Stackers	Beam Clamps	Trolleys-Plain	WW Dust Fittings	Fastening Tools
Machine Accessories	Air Tools-Industrial	Bottle Jacks	MW Drill Presses	Surface Grinders	Chain Hoist-Manual	Winches-Manual	WW Jointers	Mechanics Hand Tools
Mobile Bases	Air Tools-Light Industrial	Cable Pullers	MW Finishing Equipment	Tapping	Lever Hoists	WW Air Filtration	WW Lathes	Striking Tools
Safety Equipment	Lubrication	Cold Saws	MW Lathes	Trolleys-Air	Pullers-JCH Models	WW Bandsaws	WW Planers	Vises (non-precision)
Specialty Items		Hoists-Air	MW Precision Vises	Trolleys-Electric	Scissor Lift Tables	WW Buffers	WW Sanders	Clamps
Vise Accessories		Hoists-Electric	Pallet Trucks	Web Slings	Screw Jacks	WW Drill Presses	WW Shapers	
		Metalforming	Rigging Equip.	Winches-Electric	Trolleys-Geared	WW Dust Collectors	WW Tablesaws	
		Mill/Drills	Service Jacks			WW Dust Filters		
		Milling Machines						

WHAT IS COVERED?

This warranty covers any defects in workmanship or materials subject to the exceptions stated below. Cutting tools, abrasives and other consumables are excluded from warranty coverage.

WHO IS COVERED?

This warranty covers only the initial purchaser of the product.

WHAT IS THE PERIOD OF COVERAGE?

The general JET warranty lasts for the time period specified in the product literature of each product.

WHAT IS NOT COVERED?

Five Year Warranties do not cover woodworking (WW) products used for commercial, industrial or educational purposes. Woodworking products with Five Year Warranties that are used for commercial, industrial or education purposes revert to a One Year Warranty. This warranty does not cover defects due directly or indirectly to misuse, abuse, negligence or accidents, normal wear-and-tear, improper repair or alterations, or lack of maintenance.

HOW TO GET SERVICE

The product or part must be returned for examination, postage prepaid, to a location designated by us. For the name of the location nearest you, please call 1-800-274-6848.

You must provide proof of initial purchase date and an explanation of the complaint must accompany the merchandise. If our inspection discloses a defect, we will repair or replace the product, or refund the purchase price, at our option. We will return the repaired product or replacement at our expense unless it is determined by us that there is no defect, or that the defect resulted from causes not within the scope of our warranty in which case we will, at your direction, dispose of or return the product. In the event you choose to have the product returned, you will be responsible for the shipping and handling costs of the return.

HOW STATE LAW APPLIES

This warranty gives you specific legal rights; you may also have other rights which vary from state to state.

LIMITATIONS ON THIS WARRANTY

WMH TOOL GROUP LIMITS ALL IMPLIED WARRANTIES TO THE PERIOD OF THE LIMITED WARRANTY FOR EACH PRODUCT. EXCEPT AS STATED HEREIN, ANY IMPLIED WARRANTIES OR MERCHANTABILITY AND FITNESS ARE EXCLUDED. SOME STATES DO NOT ALLOW LIMITATIONS ON HOW LONG THE IMPLIED WARRANTY LASTS, SO THE ABOVE LIMITATION MAY NOT APPLY TO YOU.

WMH TOOL GROUP SHALL IN NO EVENT BE LIABLE FOR DEATH, INJURIES TO PERSONS OR PROPERTY, OR FOR INCIDENTAL, CONTINGENT, SPECIAL, OR CONSEQUENTIAL DAMAGES ARISING FROM THE USE OF OUR PRODUCTS. SOME STATES DO NOT ALLOW THE EXCLUSION OR LIMITATION OF INCIDENTAL OR CONSEQUENTIAL DAMAGES, SO THE ABOVE LIMITATION OR EXCLUSION MAY NOT APPLY TO YOU.

WMH Tool Group sells through distributors only. The specifications in WMH catalogs are given as general information and are not binding. Members of WMH Tool Group reserve the right to effect at any time, without prior notice, those alterations to parts, fittings, and accessory equipment which they may deem necessary for any reason whatsoever. JET® branded products are not sold in Canada by WMH Tool Group.

Table of Contents

Warnings

1. Read and understand the entire owners manual before attempting assembly or operation.
2. Read and understand the warnings posted on the machine and in this manual. Failure to comply with all of these warnings may cause serious injury.
3. Replace the warning labels if they become obscured or removed.
4. This band saw is designed and intended for use by properly trained and experienced personnel only. If you are not familiar with the proper and safe operation of a band saw, do not use until proper training and knowledge have been obtained.
5. Do not use this band saw for other than its intended use. If used for other purposes, WMH Tool Group disclaims any real or implied warranty and holds itself harmless from any injury that may result from that use.
6. Always wear approved safety glasses/face shields while using this band saw. Everyday eyeglasses only have impact resistant lenses; they are not safety glasses.
7. Before operating this band saw, remove tie, rings, watches and other jewelry, and roll sleeves up past the elbows. Remove all loose clothing and confine long hair. Non-slip footwear or anti-skid floor strips are recommended. Do **not** wear gloves.
8. Wear ear protectors (plugs or muffs) during extended periods of operation.
9. Some dust created by power sanding, sawing, grinding, drilling and other construction activities contain chemicals known to cause cancer, birth defects or other reproductive harm. Some examples of these chemicals are:

   - Lead from lead based paint.
   - Crystalline silica from bricks, cement and other masonry products.
   - Arsenic and chromium from chemically treated lumber.

   Your risk of exposure varies, depending on how often you do this type of work. To reduce your exposure to these chemicals, work in a well-ventilated area and work with approved safety equipment, such as face or dust masks that are specifically designed to filter out microscopic particles.
10. Do not operate this machine while tired or under the influence of drugs, alcohol or any medication.
11. Make certain the switch is in the **OFF** position before connecting the machine to the power supply.
12. Make certain the machine is properly grounded.
13. Make all machine adjustments or maintenance with the machine unplugged from the power source.
14. Remove adjusting keys and wrenches. Form a habit of checking to see that keys and adjusting wrenches are removed from the machine before turning it on.
15. Keep safety guards in place at all times when the machine is in use. If removed for maintenance purposes, use extreme caution and replace the guards immediately.
16. Check damaged parts. Before further use of the machine, a guard or other part that is damaged should be carefully checked to determine that it will operate properly and perform its intended function. Check for alignment of moving parts, binding of moving parts, breakage of parts, mounting and any other conditions that may affect its operation. A guard or other part that is damaged should be properly repaired or replaced.
17. Provide for adequate space surrounding work area and non-glare, overhead lighting.
18. Keep the floor around the machine clean and free of scrap material, oil and grease.
19. Keep visitors a safe distance from the work area. **Keep children away.**
20. Make your workshop child proof with padlocks, master switches or by removing starter keys.

Warnings

21. Give your work undivided attention. Looking around, carrying on a conversation and “horse-play” are careless acts that can result in serious injury.
22. Maintain a balanced stance at all times so that you do not fall or lean against the blade or other moving parts. Do not overreach or use excessive force to perform any machine operation.
23. Use the right tool at the correct speed and feed rate. Do not force a tool or attachment to do a job for which it was not designed. The right tool will do the job better and safer.
24. Use recommended accessories; improper accessories may be hazardous.
25. Maintain tools with care. Keep blades sharp and clean for the best and safest performance. Follow instructions for lubricating and changing accessories.
26. Turn off the machine before cleaning. Use a brush or compressed air to remove chips or debris — do not use your hands.
27. Do not stand on the machine. Serious injury could occur if the machine tips over.
28. Never leave the machine running unattended. Turn the power off and do not leave the machine until the blade comes to a complete stop.
29. Remove loose items and unnecessary work pieces from the area before starting the machine.
30. Never place hands directly in line with the saw blade.
31. Always use push sticks when cutting small material.
32. Raise or lower the blade guide only when the machine has been turned off and the blade has stopped moving.
33. Always wear leather gloves when handling saw blades. The operator should not wear gloves when operating the machine.
34. Do not allow the saw blade to rest against the workpiece when the saw is not running.
35. The saw must be stopped and the electrical supply must be cut off before any blade replacement, drive belt replacement, or any periodic service or maintenance is performed on the machine.
36. Remove cut off pieces carefully, keeping hands away from the blade. The saw must be stopped and the electrical supply cut off or machine unplugged before reaching into the cutting area.

Familiarize yourself with the following safety notices used in this manual:

⚠CAUTION This means that if precautions are not heeded, it may result in minor injury and/or possible machine damage.

⚠WARNING This means that if precautions are not heeded, it may result in serious injury or possibly even death.

- - SAVE THESE INSTRUCTIONS - -

Introduction

This manual is provided by WMH Tool Group covering the safe operation and maintenance procedures for a JET Model VBS-3612 Band Saw. This manual contains instructions on installation, safety precautions, general operating procedures, maintenance instructions and parts breakdown. This machine has been designed and constructed to provide years of trouble free operation if used in accordance with instructions set forth in this manual. If there are any questions or comments, please contact either your local supplier or WMH Tool Group. WMH Tool Group can also be reached at our web site: www.wmhtoolgroup.com.

Specifications

Model Number	VBS-3612
Stock Number	414470
Blade Speeds (SFPM)	Low 50-410; High 540-4925
Height Capacity, Maximum (in.)	12
Throat Capacity, Maximum (in.)	36
Table Size, Main (L x W)(in.)	23-5/8 x 27-1/2
Table Size, Auxiliary (L x W)(in.)	17-3/4 x 27-1/2
Table Height at 90° (in.)	40
Table Tilt (deg.)	10° L, 45° R
Welder (KVA)	4.2
Blade Length, approx. (in.)	195-1/4 – 198-1/4
Blade Width (in.)	1/8 min., 1/2 max.
Motor	3HP, 3Ph, 230/460V (prewired 230V), 60Hz
Floor Space Required (in.)	69 x 32
Net Weight (lbs.)	1,760

The above specifications were current at the time this manual was published, but because of our policy of continuous improvement, WMH Tool Group reserves the right to change specifications at any time and without prior notice, without incurring obligations.

Features and Terminology

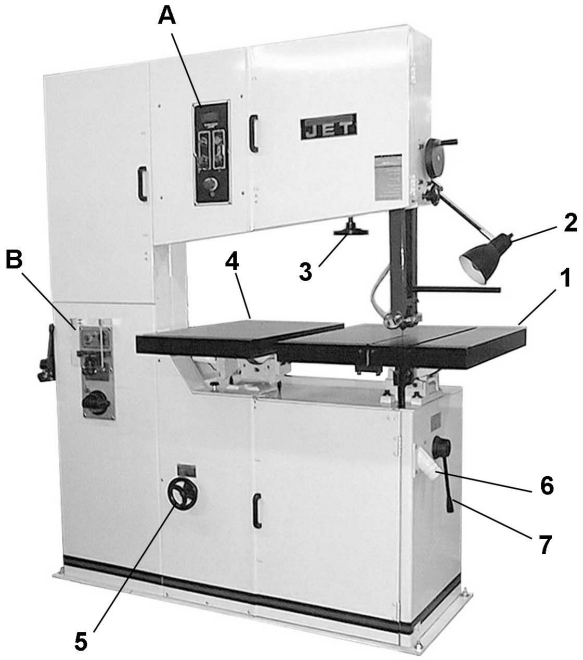

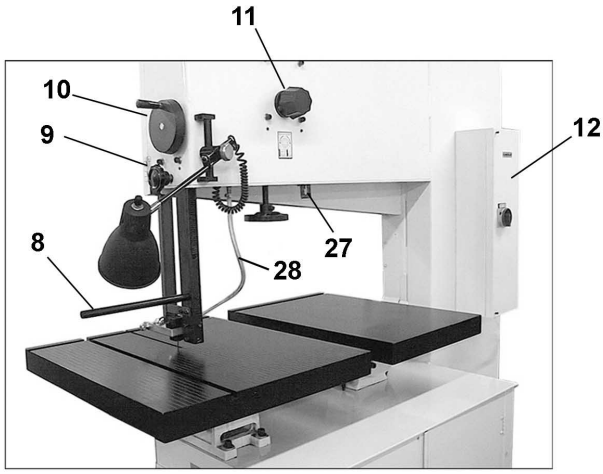

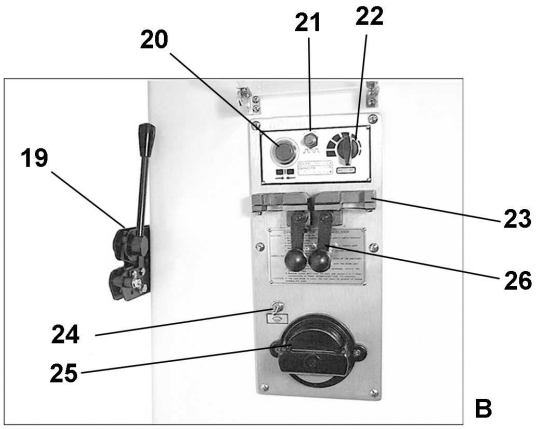

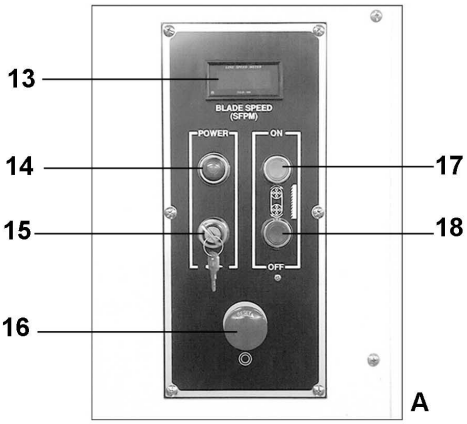

1 – Main Work Table
2 – Work Lamp
3 – Blade Tension Handwheel
4 – Auxiliary Work Table
5 – Variable Speed Handwheel
6 – Chip Port
7 – Gear Shift Lever
8 – Rod for Circle Cutting Attachment
9 – Guide Post Lock Knob
10 – Guide Post Raise/Lower Handwheel
11 – Blade Tracking Knob
12 – Electrical box
13 – Blade Speed readout (SFPM)
14 – Power Indicator Light
15 – Control Panel Lockout
16 – Emergency Stop Button
17 – Blade Start Button
18 – Blade Stop Button
19 – Shear
20 – Weld Switch
21 – Anneal Switch
22 – Clamp Pressure Selector
23 – Clamp Jaws
24 – Grinding Wheel Switch
25 – Grinding Wheel
26 – Clamp Handles
27 – Blade Tension Gauge
28 – Chip Blower Hose

Unpacking

Open shipping container and check for shipping damage. Report any damage immediately to your distributor and shipping agent. Do not discard any shipping material until the Band Saw is set up and running properly.

Compare the contents of your container with the following parts list to make sure all parts are intact. Missing parts, if any, should be reported to your distributor. Read the instruction manual thoroughly for assembly, maintenance and safety instructions.

Contents of the Shipping Container

1 Band Saw
1 Fence
1 Feed Screw
1 Miter Gauge
1 Circle Cutting Attachment
1 Shear
1 Tool box, containing:
  1 Reversible Screwdriver
  2 Socket Head Cap Screws, 5/16” x 1”
  2 Socket Head Cap Screws, 5/16” x 5/8”
  1 Eye Bolt
  1 Knob
  1 Set of Hex Wrenches
  1 Wrench, 26mm
  1 Set of Keys for control panel
  1 Set of Keys for rear door
1 Owner's Manual
1 Warranty Card

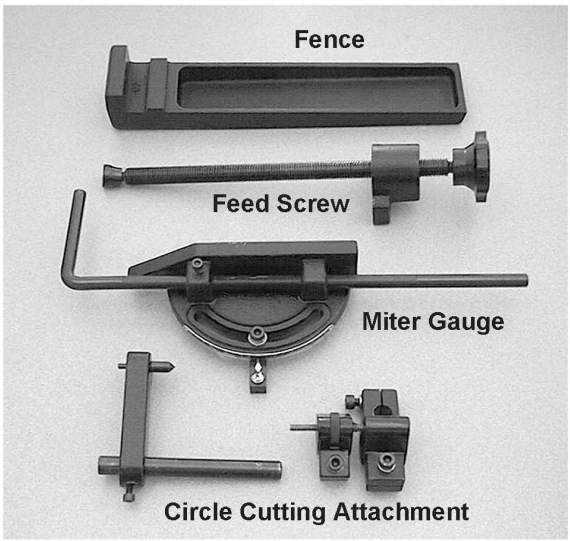

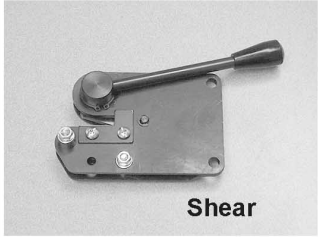

⚠WARNING **Read and understand the entire contents of this manual before attempting set-up or operation! Failure to comply may cause serious injury.**

Installation and Assembly

Tools required for assembly:

Forklift with strap or chain

Eye bolt (provided)

Set of hex wrenches (provided)

Remove all crating and plastic from around the band saw. Remove any lag screws or holding straps which secure the band saw to the wood pallet.

Remove the eye bolt from the tool box, and screw it into the hole at the top of the machine. Use a forklift with a strap or chain connected to the eye bolt to lift the band saw from the pallet.

Move the band saw to its permanent location which should be dry, well ventilated, with sufficient lighting. Leave enough space on all sides to handle long stock or perform routine maintenance on the machine. Make sure the floor is level and able to support the weight of the machine.

The Band Saw may be further stabilized by securing it to the floor using lag screws through the four holes in the stand.

Areas of the Band Saw have been given a protective coating at the factory. This should be removed with a soft cloth moistened with kerosene or mineral spirits. Do not get solvents near plastic or rubber parts, and do not use an abrasive pad as it may scratch metal surfaces.

Fence

Place the fence (Figure 1) onto the groove in the table as shown, and screw in the knob (from the toolbox) to tighten the fence in position.

Feed Screw

Use two socket head cap screws (provided) to mount the feed screw to the front edge of the table (Figure 1). Use a 6mm hex wrench to tighten the screws.

Shear

Mount the shear to the back edge of the band saw with two socket head cap screws (provided), as shown in Figure 2.

Circle Cutting Attachment

To use the circle cutting attachment, mount it to the rod as shown in Figure 3.

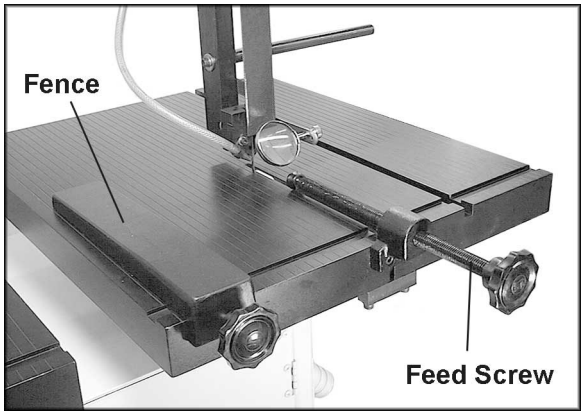

Figure 1

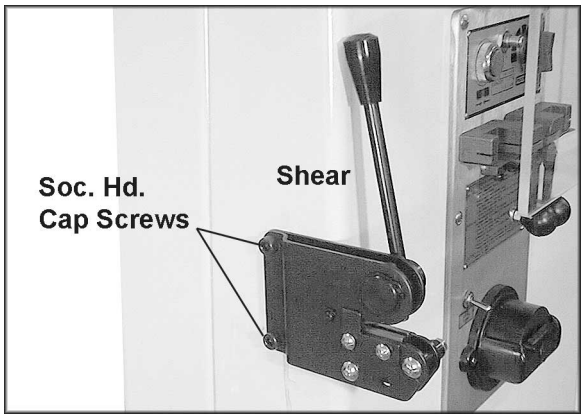

Figure 2

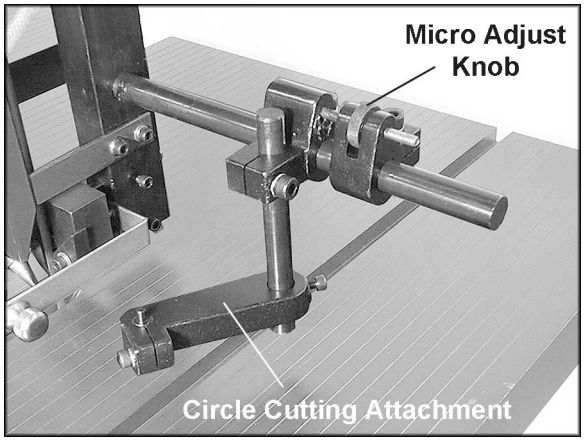

Figure 3

Grounding Instructions

⚠WARNING Electrical connections must be made by a qualified electrician in compliance with all relevant codes. This machine must be properly grounded to help prevent electrical shock and possible fatal injury.

This machine must be grounded. In the event of a malfunction or breakdown, grounding provides a path of least resistance for electric current to reduce the risk of electric shock.

Improper connection of the equipment-grounding conductor can result in a risk of electric shock. The conductor with insulation having an outer surface that is green with or without yellow stripes, is the equipment-grounding conductor. If repair or replacement of the electric cord or plug is necessary, do not connect the equipment-grounding conductor to a live terminal.

Check with a qualified electrician or service personnel if the grounding instructions are not completely understood, or if in doubt as to whether the tool is properly grounded.

Repair or replace a damaged or worn cord immediately.

Make sure the voltage of your power supply matches the specifications on the motor plate of the Band Saw. The machine should be connected to a dedicated circuit.

Extension cords

The use of an extension cord is not recommended for this Band Saw. But if one is necessary, make sure the cord rating is suitable for the amperage listed on the machine's motor plate. An undersize cord will cause a drop in line voltage resulting in loss of power and overheating.

Use the chart in Figure 4 as a general guide in choosing the correct size cord. If in doubt, use the next heavier gauge. The smaller the gauge number, the heavier the cord.

230 Volt, Three Phase Operation

The **three-phase** model is factory wired for 230 volt, but can be converted to 460 volt if so desired (see "Converting From 230 Volt to 460 Volt"). You may either install a plug or "hard-wire" the Band Saw directly to a control panel.

If you are connecting a plug, use a proper UL-listed plug suitable for 230 volt operation.

Recommended Gauges (AWG) of Extension Cords

Amps	Extension Cord Length *					
	25 feet	50 feet	75 feet	100 feet	150 feet	200 feet
< 5	16	16	16	14	12	12
5 to 8	16	16	14	12	10	NR
8 to 12	14	14	12	10	NR	NR
12 to 15	12	12	10	10	NR	NR
15 to 20	10	10	10	NR	NR	NR
21 to 30	10	NR	NR	NR	NR	NR

*based on limiting the line voltage drop to 5V at 150% of the rated amperes.
NR: Not Recommended.

Figure 4

If the Band Saw is to be hard-wired to a panel, make sure a disconnect is available for the operator. During hard-wiring of the Band Saw, make sure the fuses have been removed or the breakers have been tripped in the circuit to which the Band Saw will be connected. Place a warning placard on the fuse holder or circuit breaker to prevent it being turned on while the machine is being wired.

Converting from 230 Volt to 460 Volt (Three Phase)

To convert from 230 volt to 460 volt:

1. In the band saw's electrical box, change the setting on the dial of the overload relay ("FR" on page 42).
2. Rewire the connections to the transformer ("T2" on page 42).
3. Change the leads in the junction box on the band saw motor.
4. If using a plug, install a proper UL-listed plug suitable for 460 volt operation.

IMPORTANT: Consult the diagrams on pages 40 and 41 for clarification of each of these changes on 230V to 460V conversion.

Three-Phase Test Run

After wiring the band saw, you should check that the wires have been connected properly. Connect machine to the power source and turn it on for an instant to watch the direction of blade movement.

If the blade runs upward instead of downward, **disconnect machine from power**, and switch any two of the three leads in the motor junction box (see "Electrical Connections", page 40).

Adjustments

Blade Removal and Installation

⚠WARNING **Wear leather gloves when removing or installing band saw blades. New blades usually come in a coiled position; to prevent injury, hold the blade with one hand while carefully uncoiling it with the other.**

1. Disconnect machine from power source.
2. Open the upper and lower doors, and swing away the guard (Figure 5).
3. Remove the block from the front edge of the table (Figure 5).
4. Loosen tension on the blade by turning the tension handwheel (Figure 6) to the left.

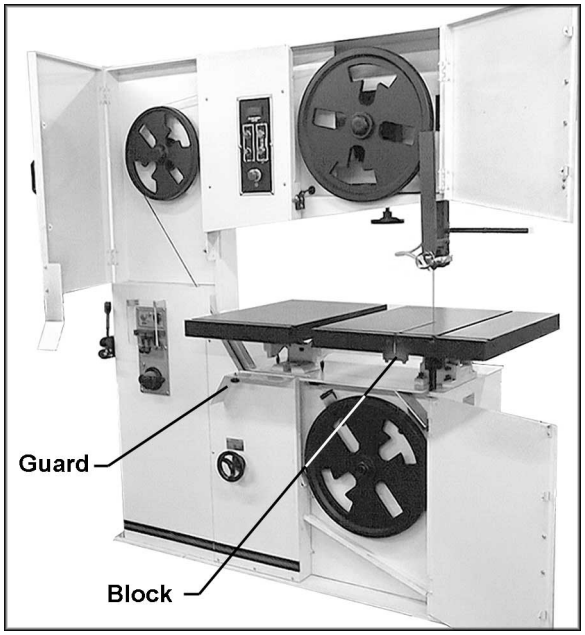

Figure 5

5. Remove the worn blade and install the new blade, making sure the teeth face downward where they pass through the slot in the table.
6. Use the tension handwheel to tighten the tension on the blade.
7. Proceed with “Blade Tension” and “Blade Tracking” before operating the band saw.

Blade Tension

Rotate blade tension handwheel to the right to increase tension on the blade, to the left to decrease tension on the blade. Initially, set the blade tension to correspond to the width of your blade, as indicated on the tension gauge (Figure 6). As you become familiar with the saw, you may find it necessary to change the blade tension from the initial setting, depending on the width of the blade as well as the material being worked.

Keep in mind that too much or too little blade tension can cause blade breakage and/or poor cutting performance.

If the band saw is not to be used for a period of time, release tension on the blade – this will prolong its life. First make a note of the specific tension setting for that blade. The tension can then be re-established quickly when operations are resumed.

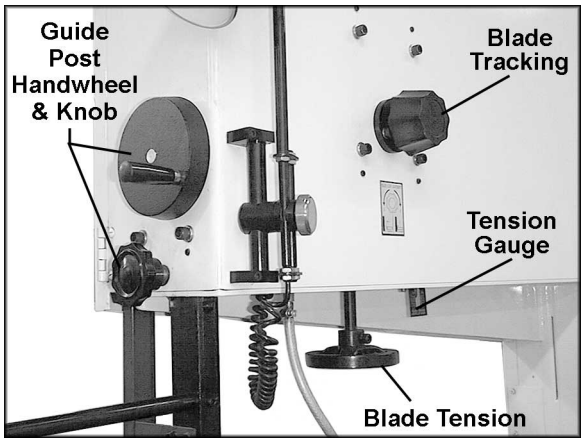

Figure 6

Blade Tracking

1. Disconnect machine from power source.
2. Open the top blade wheel doors.
3. Move the gear shift lever into neutral position (straight down).
4. Move the upper and lower blade guides away from the blade (see “Blade Guides”).
5. Rotate upper blade wheel by hand, observing the position of the blade as it rides upon the wheel. The blade should track as near the center of the wheel as possible.
6. If the blade does not track properly, rotate the blade tracking knob (Figure 6) clockwise to move the blade toward the front of the wheel (as viewed from the front of the saw) or counterclockwise to move the blade toward the rear of the wheel. NOTE: This will also move the blade away from or toward the stoppers on the blade guide assemblies, as shown in Figure 7.

   IMPORTANT: These are sensitive adjustments; make them gradually and allow the blade time to react to the changes.

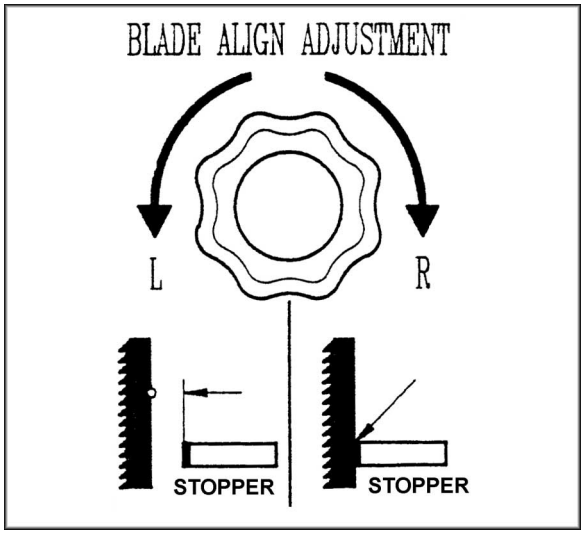

Figure 7

7. When satisfied, return the upper and lower blade guides close to the blade.
8. Close upper and lower doors.

Guide Post

For effective cutting and for safety's sake, there should be a minimum amount of space between the top of the workpiece and the bottom of the blade guides. Loosen the locking knob (see Figure 6) and rotate the handwheel (Figure 6) to raise or lower the guide post so that the guides clear the workpiece by about 3/16".

Blade Guides

⚠CAUTION Blade guides must be properly adjusted or damage may occur to the blade and/or guides.

1. Loosen the two socket head cap screws on the guide housing. See Figure 8.
2. Move the guide support forward or backward in accordance with the width of the blade. The front end of the blade guides should be adjusted approximately 1/8" behind the blade teeth. See Figure 8.
3. Tighten the hex cap screws securely.
4. This procedure should be done for both upper and lower guide housings.
5. Loosen the socket head cap screws (Figure 9) on the blade guides.
6. Move the blade guides so they are as close to the blade as possible without touching it.
7. Tighten the socket head cap screws (Figure 9).
8. This procedure should be done for both upper and lower blade guides.

As the blade guides receive use, they will become worn at the front end. If the blade guides become difficult to adjust, switch the left and right blade guides (Figure 10).

The stopper positioned behind the back edge of the blade (Figure 10) will also become worn with use, and the friction of the shaft with the saw blade may cause lines in the surface of the stopper. If this occurs, loosen the socket head cap screw, and rotate the stopper to either side to change its position on the blade. Re-tighten socket head cap screw.

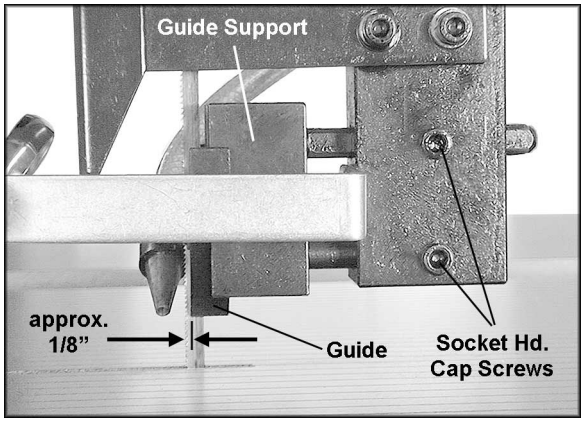

Figure 8

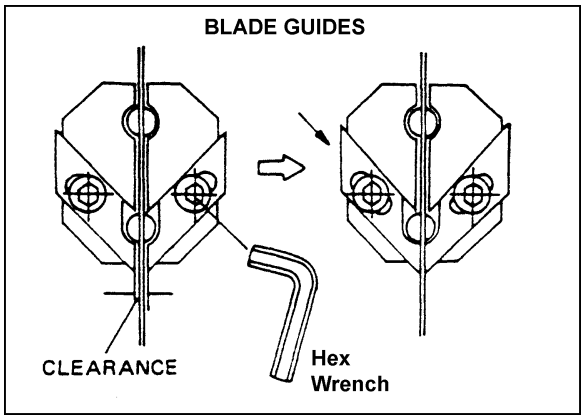

Figure 9

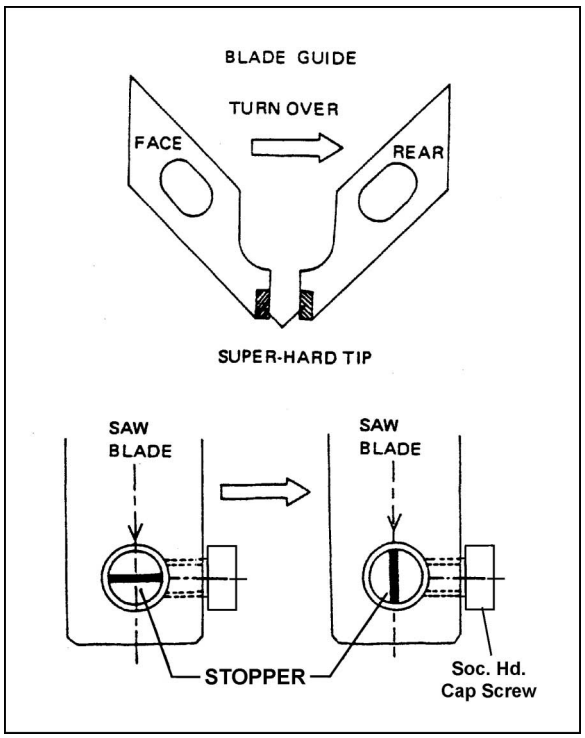

Figure 10

Squaring Work Table with Blade

1. Place the table in horizontal position with “0” on the scale (Figure 11).
2. Place a machinist’s square on the table and against the blade as shown.
3. If the square is not flush against the blade, loosen the screw below the table (Figure 11) with a 26mm wrench (provided).
4. Tilt the table as needed until the square is flush with blade. Retighten the screw.
5. Make sure the pointer is set at “0” on the scale. If it needs slight adjustment, loosen the screw and shift the pointer until it aligns with “0”. Re-tighten the screw.

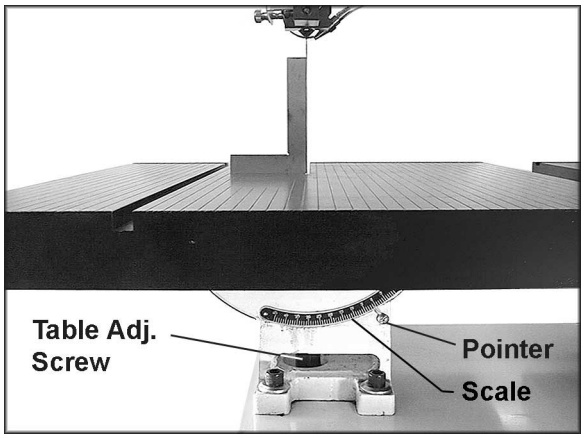

Figure 11

Auxiliary Table

1. After the main work table has been set perpendicular to the blade, use a straight edge to confirm that the auxiliary table is level with the main table, as shown in Figure 12. If the auxiliary table is not level with the main table, make adjustments as follows.
2. To tilt the auxiliary table left or right, loosen the screws (A, Figure 12) and turn one of the stops (B, Figure 12) as needed. Re-tighten screws (A, Figure 12) securely after adjustment.
3. To adjust the table front to back, loosen screws (C, Figure 12). Re-tighten screws securely after adjustment.

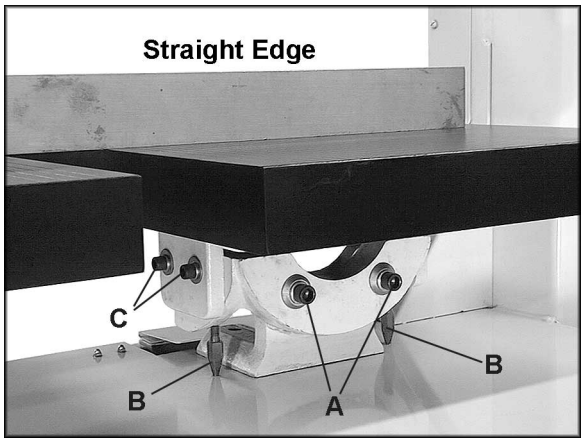

Figure 12

Replacing Drive Belts

(See Figure 13)

1. Disconnect machine from power source.
2. To remove the **motor drive belt**, loosen the four screws at the base of the motor. Lift up on the motor to slacken and remove the belt.
3. To remove the **air compressor drive belt**, loosen the four hex nuts on the base of the air compressor and slide the compressor in the direction of the motor. After installing a new belt, slide the compressor away from the motor to tension the belt, and re-tighten the four hex nuts.
4. To remove the **gearbox drive belt**, loosen the hex nuts on the base of the lower variator, and slide the lower variator upward to slacken and remove the belt.
5. To remove the **variator belt**, loosen the four hex nuts on the variator and push the variator upward to slacken the belt.

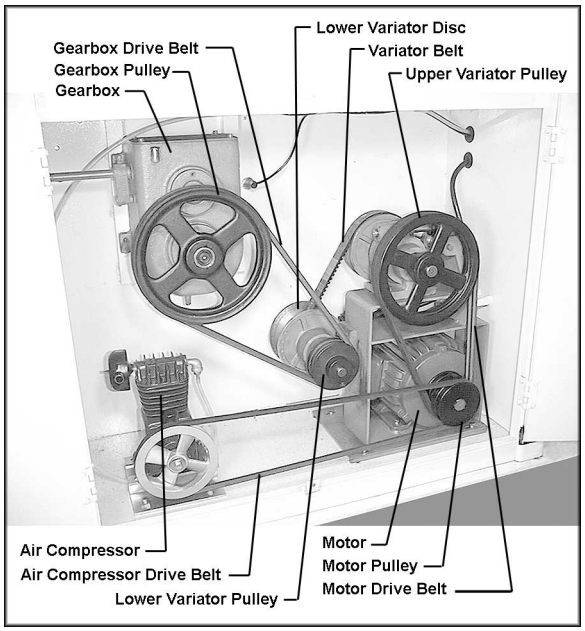

Figure 13

6. After installing new belts, make sure they are tensioned properly.

Work Lamp Bulb

The Work Lamp uses a standard medium-base 60 watt bulb.

Band Saw Operation

Consult “Features and Terminology” on page 7 for identification of the controls.

Unlock the control panel using the provided keys.

⚠WARNING Never operate the band saw without blade covers in place and secured.

Blade Break-In Procedure

New blades are very sharp and, therefore, have a tooth geometry that is easily damaged if a careful break-in procedure is not followed. Consult the blade manufacturer’s literature for break-in of specific blades on specific materials. The following procedure will be adequate, however, for break-in of JET-supplied blades on lower alloy ferrous materials.

1. Use a section of round stock.
2. Operate the saw at low speed. Start the cut with a very light feed rate.
3. When the saw has completed about 1/3 of the cut, increase the feed rate slightly and allow the saw to complete the cut.
4. Keep the feed rate at the same setting and begin a second cut on the same or similar workpiece.
5. When the saw has completed about 1/3 of the cut, increase the feed rate while watching the chip formation until cutting is at its most efficient rate (refer to “Evaluating Cutting Efficiency” below). Allow the saw to complete the cut.
6. The blade is now considered ready for use.

Setting Blade Speed

1. Refer to the Speed and Pitch selection chart on page 23. Select the speed setting for the material to be cut.
2. While the machine is NOT running, move the gear shift lever to the required speed setting (high or low). See Figure 14.

⚠CAUTION Move the gear shift lever only when the machine is NOT running, to prevent damage to the gearbox.

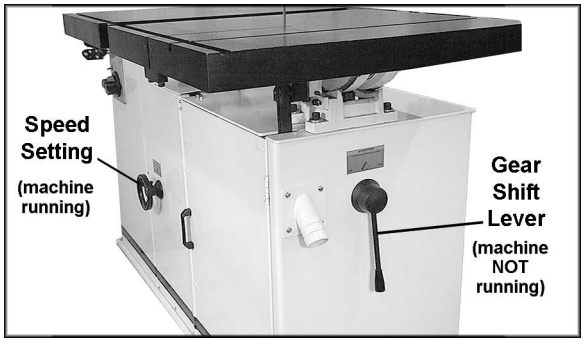

Figure 14

3. Start the saw using the pushbutton.
4. Turn the speed setting handwheel (Figure 14) to the required speed. Turning the handwheel clockwise increases speed. Turning counterclockwise decreases speed.

⚠CAUTION **Rotate the speed setting handwheel only when the band saw is running.**

Evaluating Cutting Efficiency

The best way to determine whether the blade is cutting efficiently is to observe the chips formed by the cutting.

- If the chip formation is powdery, then the feed is much too light, or the blade is dull.
- If the chips formed are curled, but colored – blue or straw colored from heat generated during the cut – then the feed rate is too high.
- If the chips are slightly curled and are not colored by heat – the blade is sufficiently sharp and is cutting at its most efficient rate.

Welder Operation

⚠WARNING **Wear eye protection while operating the welder. Use care when handling the blade after welding to avoid burns.**

The welding procedure involves the following steps: Shearing the blade, grinding teeth to allow for the weld area, the actual welding, inspection of the blade, annealing, grinding and a final inspection of the blade. This procedure can be accomplished using the shear and welder assemblies on your band saw. Proceed as follows:

Shearing

Cut the blade to the longest length needed for the band saw. Using the shear to cut your blade will ensure that the blade ends are cut flat, square and smooth.

1. Place the blade in the shear as shown in Figure 15. Make sure the blade is held square with the shear knife, so that the cut will be square with the blade.
2. Position the blade so that the cut is made at a place that allows for uniform spacing of the teeth. See Figure 16.
3. Push down the handle.

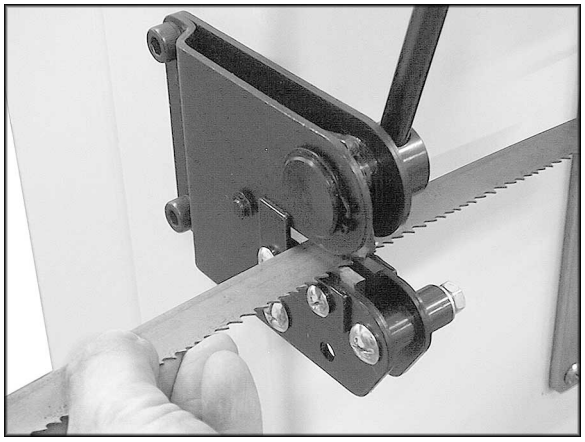

Figure 15

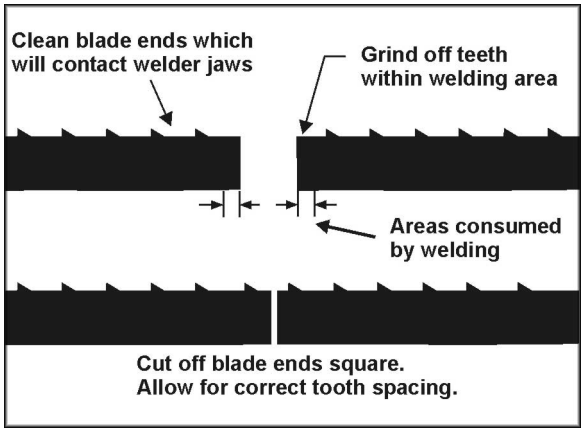

Figure 16

IMPORTANT: If a blade has been cut by using snips, the ends of the blade must be ground square before welding them together, as shown in Figure 17.

Removing Teeth

In fine pitched blades, one or more of the teeth on each side of the cut may need to be removed by grinding so that the weld area of the blade is uniform and the teeth will be uniformly spaced. See Figure 16.

Welding

4. Carefully clean the ends of the blade which will contact the welder jaws. Remove any dirt, oil, scale and oxide.

⚠CAUTION Any rust (oxide) on the blade in the vicinity of the weld must be ground off before the blade can be welded.

5. Turn pressure knob to “0” position (pointed downward). NOTE: There will be some resistance when turning the knob.
6. Insert one end of the blade in the left clamp (Figure 18). Position the back edge of the blade against the back edge of the left clamp. Then position the end of the blade midway between the left and right clamps. Tighten the left clamp.
7. Insert the other end of the blade in the right clamp. Position the back edge of the blade against the back of the right clamp. Then butt the end of the blade against the other end of the blade (the blade ends need to be in contact with each other). Tighten the right clamp.
8. Set the pressure selector switch (counterclockwise rotation) to the approximate setting required for the width of the blade being welded.

⚠WARNING Keep hands clear of the weld area and the clamp jaws during welding.

9. Press and hold the weld button (Figure 18). When the weld button is pushed, the left clamp moves to the right to apply pressure to the blade ends. At the same time, sparks will come from the blade ends as they are being welded. Do not release weld button until the blade joint is “red hot.”
10. Release the weld button, and wait 3 or 4 seconds until blade returns to original color. Unclamp the blade.
11. Rotate the pressure selector switch back to “0”.

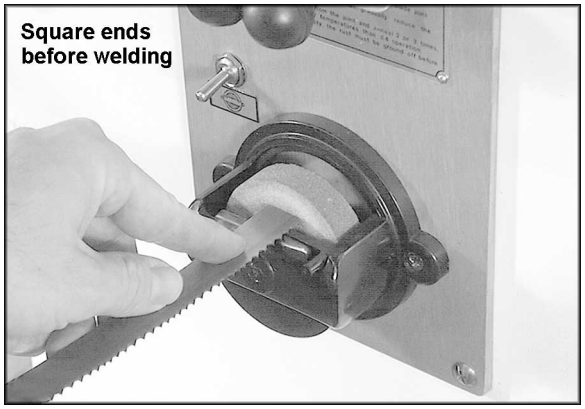

Figure 17

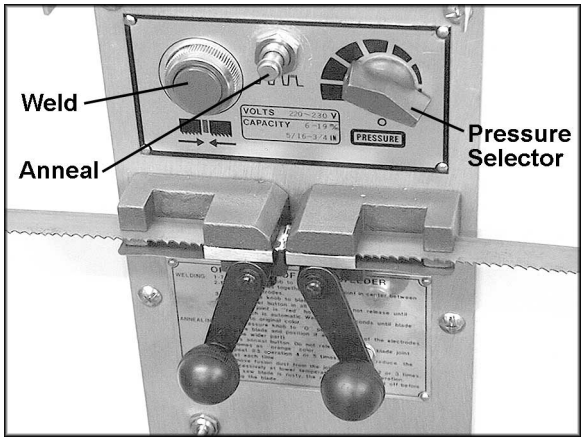

Figure 18

⚠CAUTION **The welder is designed for intermittent use. Repeated welding within a short period of time may cause the welder to overheat.**

12. Remove the blade from the clamps, and carefully inspect it. The spacing of the teeth should be uniform and the weld should be located in the center of the gullet. Misalignment is easily noted at this time from the weld appearance. See Figure 19 for examples of incorrect welds.

13. If the weld is imperfect, refer to the trouble-shooting section on page 28 for possible remedies to any problems. Make corrections before annealing.

Annealing

The blade must now be annealed, or cooled at a controlled rate to prevent it from becoming too brittle.

14. Turn the pressure selector knob all the way to the left so the clamp jaws are closest to each other.

15. Insert the blade into the clamps so the weld area is centered between the clamps. Secure the blade in the jaws with the clamp handles.

16. Quickly press and release (jog) the anneal button (Figure 18). Repeat the press-and-release process until you see a slightly red glow from the weld area.

⚠CAUTION **Do not press and hold the anneal push button. The weld will be overheated and will fail due to the excessive heat.**

17. Release both blade clamps, allow the blade to cool, then remove the blade from the clamps.

18. Check the integrity of the weld. Bend the blade to form a radius at the point of the weld. The size of the radius should be approximately the same as the radius of the band saw drive wheel. The weld must hold and not break or crack after forming the radius. If the weld breaks, cut away the welded area and repeat the welding-annealing process.

19. Check to make sure the welded section is the same thickness as the rest of the blade. If not, grind off excess weld material using the grinder (Figure 20). Figure 21 illustrates some unacceptable grindings.

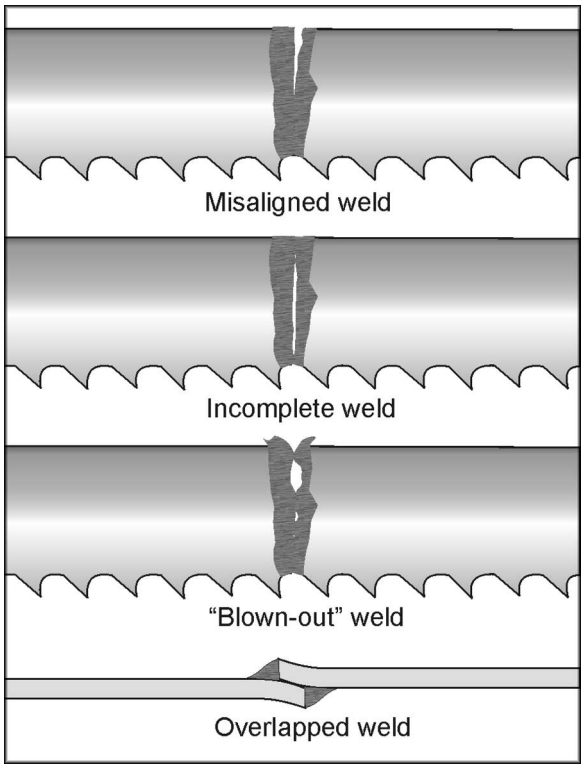

Figure 19

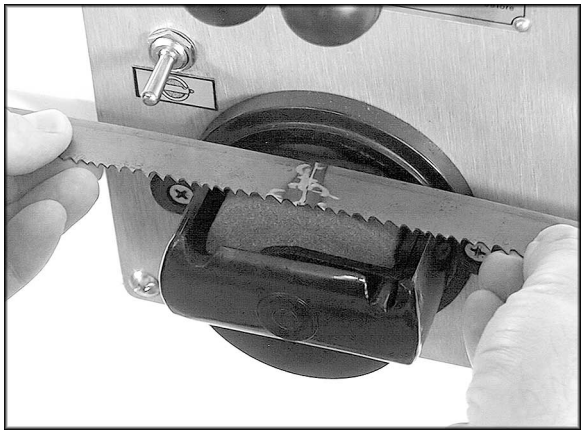

Figure 20

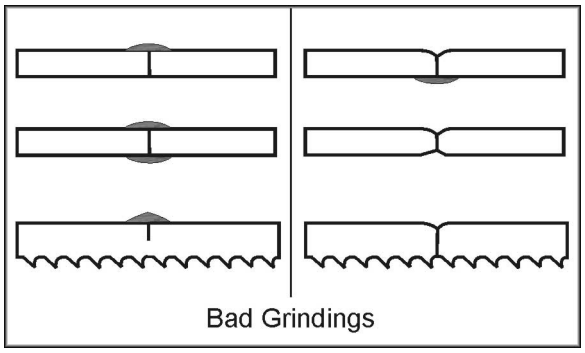

Figure 21

⚠CAUTION **If the blade is thicker at the weld than at the rest of the blade, using the blade may damage the guides.**

20. When grinding, do not hit the teeth, or grind deeper than the thickness of the blade; or burn or overheat the weld area. Be sure to remove flash from the back edge of the blade. Any flash or “stub” teeth which project beyond the normal set or height of the other teeth must be ground off.

Clean Up

It is very important that the clamp jaws be kept clean at all times. The jaws or inserts must be wiped or scraped clean after every weld. Doing this will ensure better welds by holding proper alignment, preventing flash from becoming embedded in the blade, and preventing shorts or poor electrical contact.

Blade Selection

Using the proper blade for the job will increase the operating efficiency of your band saw, help reduce necessary saw maintenance, and improve your productivity. Thus, it is important to follow certain guidelines when selecting a saw blade. Blade breakage, teeth stripping, crooked cuts, and other common complaints are, in most instances, caused by using the wrong blade.

Consider these factors when selecting a blade:

- The type of material you will be cutting.
- The thickness of the workpiece.
- The features of the workpiece, such as bends or curves with small radii.

These factors are important because they involve basic concepts of saw blade design. There are six blade features that are normally changed to meet certain sawing requirements:

1. width
2. gage
3. pitch (number of teeth per inch)
4. tooth form (or shape)
5. the “set” of the teeth
6. the blade material itself

Width

Band saw width is measured from the back of the blade to the tip of the tooth. Always use the widest blade possible that still performs the needed job. Generally, wider blades are used for straight cutting. Narrower blades are used when the part being cut has curves with small radii. Refer to the chart in Figure 22 to select a width for radius cutting.

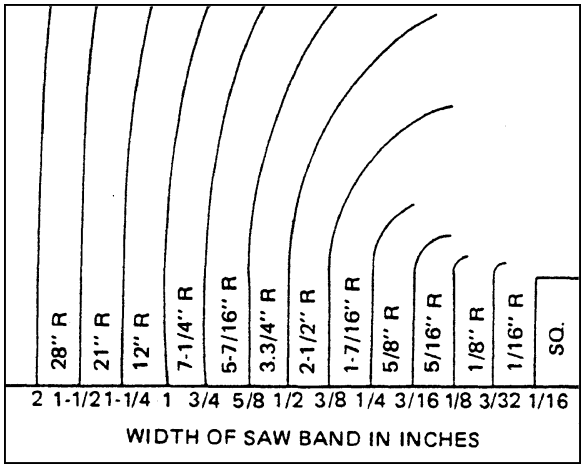

The radii in this chart are all based on cutting 1-inch thick mild steel and using manual feed. In order to cut a close tolerance radius the following factors, in addition to the blade width, must be considered: thickness, machinability, feed force and the location of the pivot point. Heavy feed in thick work, for example, results in a barrel-shaped cut.

Figure 22

Gage

Use the standard gage (blade thickness) except when the increased thickness of the workpiece decreases accuracy and width cannot be increased to compensate.

Examples of heavy gage applications:

1. When radius cutting in thick materials.
2. When the maximum width usable on the machine still provides insufficient beam strength for the blade. (Beam strength is the blade's resistance to compression caused by strong feeding or the type of material being cut).

Pitch

Pitch is measured in "teeth per inch" (T.P.I.) and can be constant or variable. Figure 23 shows blades with different pitches. A fine pitch (more teeth per inch) will cut slower but smoother. A coarse pitch (fewer teeth per inch) will cut rougher but faster.

As a rule of thumb, the thicker the workpiece, the coarser will be the blade pitch. If you have to cut a hard or very brittle material, you will probably want to use a blade with a finer pitch in order to get clean cuts.

Using a blade with too few teeth may cause vibration and a rough cut, while too many teeth may cause the gullets to fill with shavings and overheat the blade.

As a general rule, use a blade that will have no fewer than 6 and no more than 12 teeth in the workpiece at any given time.

The chart on page 23 will aid in determining pitch for a particular job.

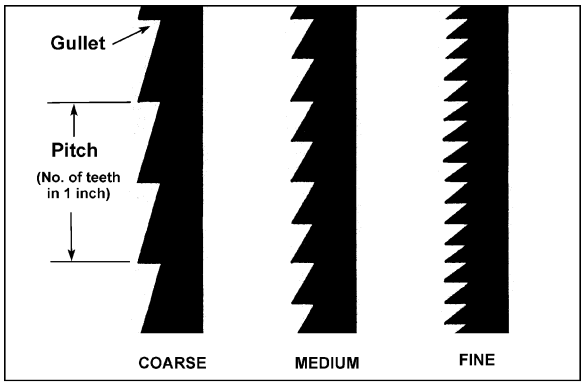

Figure 23

Shape

Figure 24 shows common types of tooth shape. Tooth shape has an effect on cutting rate.

The Regular blade, sometimes called a "raker" blade, has evenly spaced teeth that are the same size as the gullets, and a 0-degree rake angle. This is a good general-purpose blade, and often works well with ferrous metals.

The Skip type has fewer teeth and larger gullets, providing the added chip clearance needed for cutting softer, nonferrous materials, as well as non-metallic applications such as wood, plastic, cork, and composition materials.

The Hook blade has larger teeth and gullets and a positive rake angle which permits better feed and chip removal. It is useful for both cast iron as well as hard, nonferrous alloys.

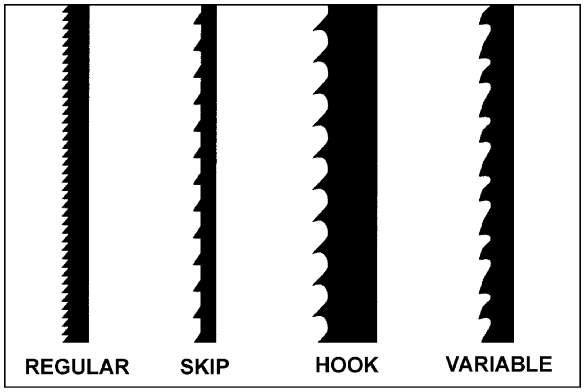

Figure 24

Variable-tooth blades combine features of the other styles. They generally offer smooth cuts and long blade life, while reducing noise and vibration.

Set

The term “set” refers to the way in which the saw teeth are bent or positioned. Bending the teeth creates a kerf that is wider than the back of the blade.

Set patterns are usually selected depending upon the type of material that needs to be cut. Three common set patterns are shown in Figure 25.

The Regular, or Raker, set is generally furnished on blades which have 2 to 24 teeth per inch. These blades have one tooth set to left, one to right, and one unset tooth called a raker. The raker set is often used for contour cutting.

The Wave set is generally furnished on blades which have 8 to 32 teeth per inch. This set has groups of teeth bent alternately to left and right, which reduces the strain on individual teeth. Blades with a wave set are used where tooth breakage is a problem, such as in cutting thin stock or where a variety of work is cut without changing blades; also when the thickness of the workpiece changes, such as cutting hollow tubing or structurals.

The Straight set has teeth in a consistent, alternating pattern, which is good for fast, basic cuts where a fine finish is not important. This set is also popular for cutting wood and plastics.

Material

Some of the most common blade materials include:

Carbon Steel Blade – widely used because of its general adaptability for all types of work and for its lower cost. Excellent for cutting nonferrous metals and plastics.

High Speed Steel Blade – resists heat generated while cutting to a far greater extent than carbon steel blades. Best suited for cutting nonferrous metals.

Carbide-Tipped Blade – Best used for cutting titanium, beryllium, and case hardened materials.

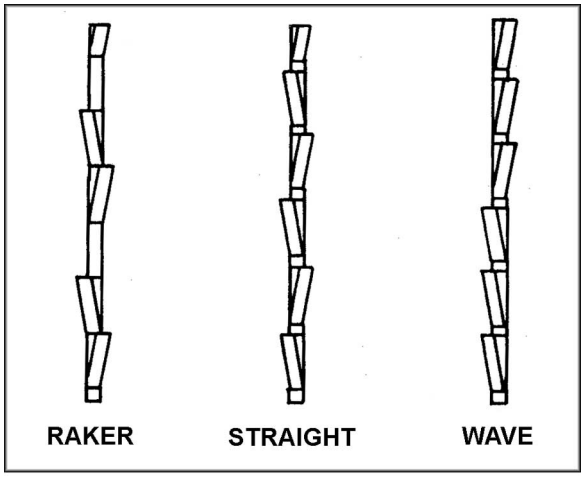

Figure 25

Blade Breakage

Band saw blades are subject to high stresses and breakage may sometimes be unavoidable. However, many factors can be controlled to help prevent most blade breakage. Here are some common causes for breakage:

1. Misalignment of the blade guides.
2. Feeding workpiece too quickly.
3. Using a wide blade to cut a short radius curve.
4. Excessive tension.
5. Teeth are dull or improperly set.
6. Upper guides are set too high off the workpiece.
7. Faulty weld on blade.

Maintenance

⚠WARNING Before doing maintenance on the machine, disconnect it from the electrical supply by pulling out the plug or switching off the main switch! Failure to comply may cause serious injury.

Use a brush to loosen accumulated chips and debris. Use a shop vacuum to remove the debris. Make sure the chip brush on the lower band wheel is properly adjusted.

Lubricate the air compressor with air tool oil about every six months, or more frequently if necessary. Unscrew the cap (Figure 26) and add oil. Replace cap when finished.

Add grease to the gear box through the grease fitting; also add grease as needed to the worm gear.

If the power cord is worn, cut, or damaged in any way, have it replaced immediately.

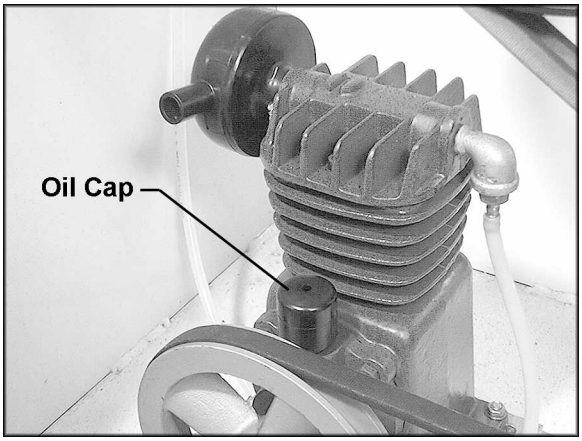

Figure 26

The chart (Figure 27) identifies areas that require cleaning and/or lubricating. Use good quality, general purpose lubricants.

Machine Part	Lubricant	Frequency
Bearings	Machine oil	Wipe down every day and lubricate every 6 months
Rack and sliding portion of Guide Post	Grease	every 7 days
Gear shift lever	Grease	every 6 months
Worm gear	Grease	every 3 months
Variator pulley	Machine oil	every 3 months
Blade tension screw	Grease	once a month
Air compressor reservoir	Air Tool oil	every 6 months
Weld clamp jaws	-------	clean after each use
Rubber tire	-------	wipe off daily
Work tables	-------	clean daily

Figure 27

Speed and Pitch Chart

Thickness / Material	Sawing speed (M/min) for specified Material & thickness					Pitch (No. of teeth / inch)				
	~1/4	1/4~1	1~3	3~6	6~	~1/4	1/4~1	1~3	3~6	6~
High carbon steel	70	60	60	45	45	18	14	10	6	4
Free cutting steel	60	45	40	30	30	18	14	12	6	4
Ordinary tool steel	40	30	30	25	20	24	18	14	8	4
High speed steel	30	25	20	20	20	24	14	12	8	4
Stainless steel	25	20	20	20	20	18	14	10	8	4
Thick iron plate	45	30	20	20	20	18	14	10	8	4
Cast iron	45	40	30	25	20	18	14	12	8	4
Aluminum 108,A108	365	275	180	120	60	18	10	6	3	3
A132,C133	365	275	180	120	60	18	10	6	3	3
13,43,85,4032,6151	550	425	245	150	90	18	10	6	3	3
113,138,152,B-195	550	380	275	180	90	18	10	6	3	3
B-214,312,333	550	380	275	180	90	18	10	6	3	3
212,355,356,360,380	550	380	275	180	90	18	10	6	3	3
142,195,750	915	825	735	670	610	18	10	6	3	3
2014,2018,2025	915	825	735	670	610	18	10	6	3	3
6053,7075	915	825	735	670	610	18	10	6	3	3
6061,6063	1500	1220	1065	915	770	18	10	6	3	3
122,214,218,220	1500	1385	1220	1065	915	18	10	6	3	3
1100,2011,2017,3003,3004	1500	1500	1500	1385	1220	18	10	6	3	3
2024,5052	1500	1500	1500	1500	610	18	10	6	3	3
Magnesium bronze	125	75	40	25	20	14	8	6	3	3
Leaded commercial branze	915	610	450	305	150	14	8	6	3	3
Commercial branze	150	105	60	30	20	14	8	6	3	3
Free cutting brass	1220	915	610	450	300	14	8	6	3	3
Forging brass	610	460	335	245	150	14	8	6	3	3
High leaded brass	1065	825	565	410	260	14	8	6	3	3
Leaded brass	610	460	275	215	150	14	8	6	3	3
Low loaded brass	455	305	150	60	20	14	8	3	3	3
Leaded copper	765	550	360	240	120	14	8	3	3	3
Cadmium copper	90	60	30	25	20	14	8	3	3	3
Magnesium	1500	1385	1220	915	610	14	8	3	3	3
Cadmium	1220	1065	915	915	760	14	8	6	3	3
Manganese	60	45	30	25	20	24	14	6	3	3
Nickel	55	40	30	25	20	18	14	6	3	3
Bdenum	55	45	40	35	25	18	14	6	3	3
Chrome	50	40	25	20	20	18	14	6	3	3
Silicon	55	30	30	20	20	18	14	6	3	3
Carbon (8~35)	1220	1065	915	765	610	10	6	3	3	3
Carbon (35~65)	615	245	90	45	20	14	10	6	3	3
Carbon (1008~ 1095)	60	45	30	25	20	24	14	6	3	3
Rubber	460	155	90	60	45	18	14	10	8	6
Plastics	1500	1065	765	550	455	10	8	3	3	3

Typical Band Saw Operations

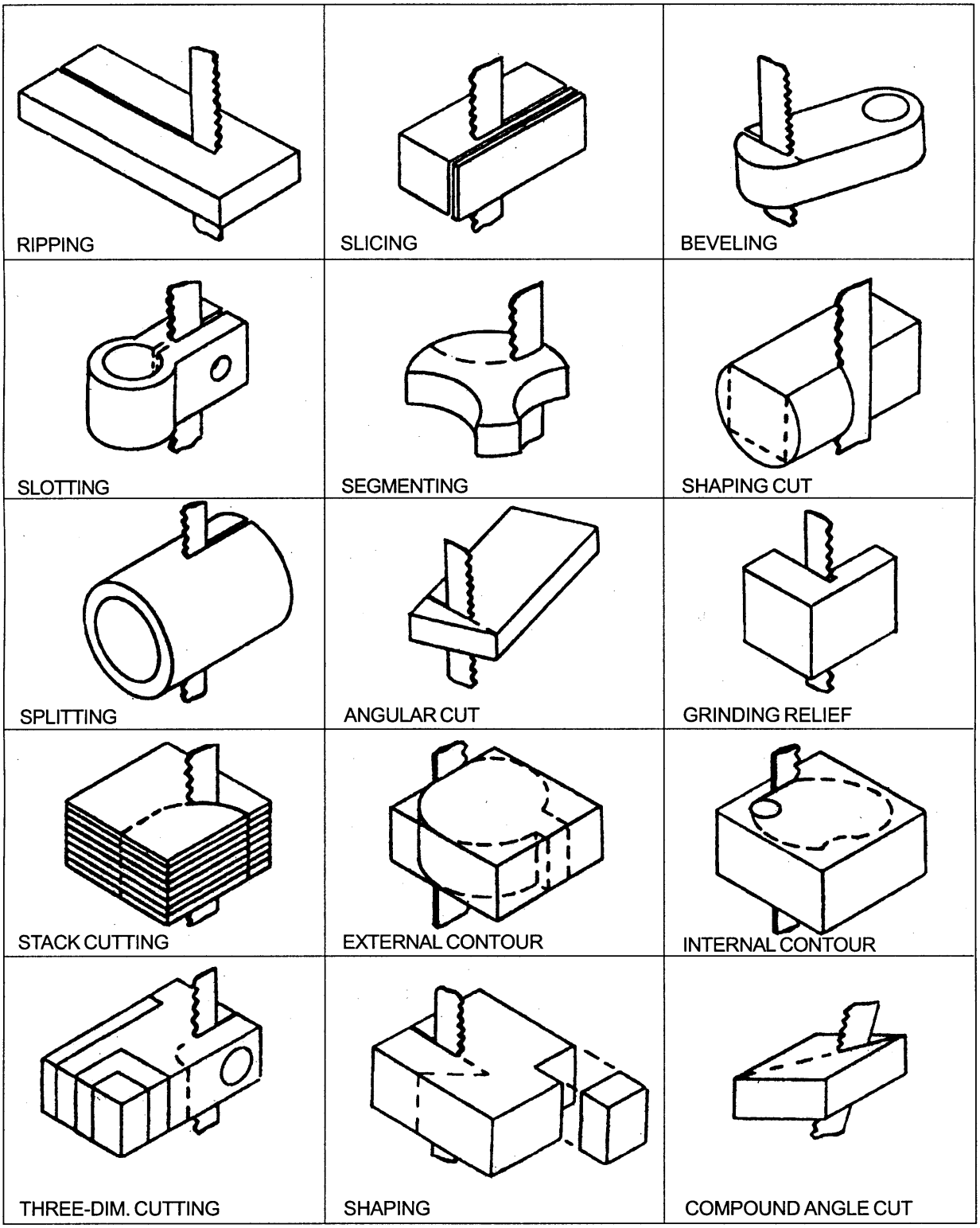

Troubleshooting – Operating Problems

Trouble	Probable Cause	Remedy
Saw blade is twisted.	Blade has been improperly welded.	Re-weld the blade (see pages 16-19).
	Blade not installed properly.	Set the guide inserts closer, and increase blade tension.
	Feeding workpiece too forcefully.	Decrease feed rate.
	Incorrect choice of blade.	Use a proper width blade for radius or wavy line cutting.
Cuts not straight.	Blade tooth has improper set.	File to proper set or replace blade.
	Not enough blade tension.	Increase tension.
	Guide post too high.	Set guide post closer to the workpiece.
	Feed rate too strong.	Decrease feed rate.
Blade slips off wheel(s).	Blade not tensioned enough.	Increase tension.
	Wheels not aligned properly.	Contact technical service for adjustment of wheel alignment.
Blade quickly becomes dull.	Blade speed too fast.	Use slower speed.
	Wrong blade for the job.	Use proper blade for workpiece.
	Feed rate excessive.	Decrease feed rate.
Blade warps.	Dull blade.	Sharpen or replace blade.
	Guide post not fixed properly.	Fix guide post in position.
	Blade not tensioned enough.	Increase tension.
	Blade not 90° to table.	Adjust table perpendicular to blade (see page 14).
Band Saw is noisy, or vibrates too much.	Band Saw not resting on level surface.	Floor must be flat.
	The variator pulley is damaged.	Replace pulley.
Blade teeth keep breaking.	Incorrect blade for the job.	Select proper blade pitch and style.
	Blade is of inferior material.	Use better quality blade.
Blade becomes damaged easily.	The blade has been over-annealed.	Decrease annealing temperature.
	Too large a gap between blade guides and blade.	Adjust proper gap between guides and blade (see page 13).
	Blade too wide for short radius cutting.	Select narrower blade appropriate to the job.

Troubleshooting – Mechanical and Electrical Problems

Trouble	Probable Cause	Remedy
Machine will not start/restart or repeatedly trips circuit breaker or blows fuses.	No incoming power.	Verify machine is connected to power source. Make sure START button is pushed in completely, and the STOP button is disengaged.
	Cord damaged.	Replace cord.
	Overload automatic reset has not reset.	When the band saw overloads on the circuit breaker built into the motor starter, it may take time for the machine to cool down before restart. Allow unit to adequately cool before attempting restart. If problem persists, check amp setting on the motor starter.
	Band Saw frequently trips.	One cause of overloading trips which are not electrical in nature is too heavy a cut. The solution is to reduce feed pressure into the blade. If too heavy a cut is not the problem, then check the amp setting on the overload relay. Match the full load amps on the motor as noted on the motor plate. If amp setting is correct then there is probably a loose electrical lead. Check amp setting on motor starter.
	Building circuit breaker trips or fuse blows.	Verify that band saw is on a circuit of correct size. If circuit size is correct, there is probably a loose electrical lead. Check amp setting on motor starter.
	Switch or motor failure (how to distinguish).	If you have access to a voltmeter, you can separate a starter failure from a motor failure by first, verifying incoming voltage at 220+/-20 and second, checking the voltage between starter and motor at 220+/-20. If incoming voltage is incorrect, you have a power supply problem. If voltage between starter and motor is incorrect, you have a starter problem. If voltage between starter and motor is correct, you have a motor problem.
	Motor overheated.	Clean motor of dust or debris to allow proper air circulation. Allow motor to cool down before restarting.

Trouble	Probable Cause	Remedy
Machine will not start/restart or repeatedly trips circuit breaker or blows fuses.	Motor failure.	If electric motor is suspect, you have two options: Have a qualified electrician test the motor for function or remove the motor and take it to a qualified electric motor repair shop and have it tested.
	Miswiring of the unit.	Double check to confirm all electrical connections are correct. Refer to appropriate wiring diagrams on pages 40 and 41 to make any needed corrections.
	Switch failure.	If the start/stop switch is suspect, you have two options: Have a qualified electrician test the switch for function, or purchase a new start/stop switch and establish if that was the problem on changeout.
Band Saw does not come up to speed.	Extension cord too light or too long.	Replace with adequate size and length cord.
	Low current.	Contact a qualified electrician.

Troubleshooting – Welded Blade Inspection

Trouble	Probable Cause	Remedy
Weld is misaligned.	Dirt or scale on clamp jaws or blade.	Always keep jaws clean. Clean blade before welding.
	Blade ends not square.	Before welding, grind cut edges of the blade until they are square. Use the shear on the band saw for square cuts.
	Blade ends not correctly aligned when clamped in jaws.	Align the ends properly before clamping.
	Worn clamp jaws	Replace clamp jaws.
	Clamp jaws not aligned correctly.	Align jaws correctly.
Misaligned weld: Blade ends are overlapped.	Pressure knob is set for wider blade than the one used.	Adjust the pressure knob correctly for particular blade width.
	Blade ends or clamp jaws not aligned correctly.	Make corrections as needed.
Weld breaks when used.	Weld is weak and incomplete; possible “blow holes” (see Figure 19).	Cut and re-weld the blade ends.
	Weld has been ground too thin.	Cut and re-weld the blade ends.
	Weld is not annealed correctly.	Follow annealing instructions on page 18.
Incomplete weld.	Pressure knob not set correctly.	Make appropriate adjustment
	Improper clamping procedures.	Follow instructions on pages 16 through 19.
	Limit switch (#1, page 39) not adjusted correctly.	Adjust limit switch correctly.
	Defective limit switch; doesn’t break circuit at end of welding operation.	Replace limit switch.
	Clamp jaw movement obstructed by kinked jaw cable or tangled wires.	Bend cable and untangle wires.
Brittle weld.	Incorrect annealing heat.	Bring weld up to correct color (see page 18).
	Scale or oil on weld caused poor annealing.	Keep clamp jaws and blade clean.

Troubleshooting – Welder Mechanical Problems

Trouble	Probable Cause	Remedy
Weld could not be made. Jaws do not move.	Wire connection is poor; connecting point of welding switch is bad.	Change switch, or grind the connecting port with a file.
	Transformer burnt out.	Change transformer, or re-wire it.
	Blade has oil on it.	Wipe off any oil.
	Blade ends have rust on them.	Grind off the rust.
Weld area melts when weld switch is pushed.	Welding switch is cutting off too late.	Screw the welding switch connecting nut tighter.
	Welding press is too weak.	Rotate the pressure selector knob accordingly.
	Jaw movement is too slow.	Put some oil on the rear side of the welding lever and the two jaws.
Blade can not be tightly clamped with the clamp jaws.	Clamp jaws are out of order, or decayed.	Replace clamp jaws.
	Lower jaw inserts are out of order.	Replace lower jaw inserts.
Annealing doesn't occur when the annealing button is pushed.	Annealing switch connection is poor.	Change the annealing switch.
	Fuse is blown.	Replace fuse.
Annealing button will not return to correct position after it is released.	Annealing button has dust or debris around it.	Remove the annealing button housing and clean out any dust or debris.
Grinder will not run when the Grinder switch is pushed.	Grinder motor is burnt out.	Change grinder motor or re-wire it.
	Grinder switch is bad.	Replace grinder switch.

Replacement Parts

Replacement parts are listed on the following pages. To order parts or reach our service department, call 1-800-274-6848 between 7:30 a.m. and 6:00 p.m. (CST), Monday through Friday. Having the Model Number and Serial Number of your machine available when you call will allow us to serve you quickly and accurately.

Parts List: VBS-3612 Band Saw

(refer to breakdowns on pages 35 and 36)

Index No.	Part No.	Description	Size	Qty
1	VBS3612-101	Gear Box		1
2	TS-0209101	Socket Head Cap Screw	3/8”-16 x 2-1/4”	4
3	TS-0720091	Lock Washer	3/8"	26
4	TS-0680041	Flat Washer	3/8"	24
5	TS-0271091	Set Screw	3/8”-16 x 1"	4
6	VBS3612-106	Oil Seal	Φ40 x Φ30 x 7mm	1
7	VBS3612-107	Oil Seal	Φ52 x Φ30 x 7mm	1
8	VBS3612-108	Gear Box Cover		1
9	TS-0050011	Hex Cap Screw	1/4”-20 x 1/2"	4
10	TS-0720071	Lock Washer	1/4"	6
11	TS-0680021	Flat Washer	1/4"	6
12	VBS3612-112	Gear		1
13	VBS3612-113	Key	6 x 35mm	1
14	VBS3612-114	Oil Seal	Φ30 x Φ19 x 8mm	1
15	VBS3612-115	Retaining Ring	30	1
16	VBS3612-116	Gear		1
17	VBS2012-0530	Screw Nut	35mm	1
18	VBS3612-118	Screw Nut	26mm	1
19	VBS3612-119	Gear		1
20	VBS3612-120	Gear Shaft		1
21	VBS3612-121	Key	1/4 x 5/8"	2
22	VBS3612-122	Shaft Cover		1
23	TS-0207041	Socket Head Cap Screw	1/4”-20 x 3/4"	9
24	VBS3612-124	Gear		1
25	VBS3612-125	Main Shaft		1
26	VBS3612-126	Retaining Ring	30mm	1
27	VBS3612-127	Main Shaft Cover		1
28	VBS3612-128	Oil Seal	Φ58 x Φ40 x 8mm	1
29	VBS3612-129	Speed Changing Shaft		1
30	VBS3612-130	Speed Changing Arm		1
31	TS-0561011	Hex Nut	1/4"-20	3
32	VBS3612-132	Shaft Stopper		1
33	TS-0270051	Socket Set Screw	5/16”-18 x 1/2”	1
34	VBS3612-134	Spring		1
35	VBS3612-135	Slide Block		1
36	VBS3612-136	Clutch		1
37	VBS3612-137	Brass Bushing		2
38	VBS3612-138	Brass Bushing		1
39	VBS3612-139	Speed Changing Lever		1
40	VBS3612-140	Shaft Housing		1
41	VBS3612-141	Socket Head Cap Screw	10-24 x 5/8"	3
42	VBS3612-142	Speed Lever Ring		1
43	TS-0209031	Socket Head Cap Screw	3/8”-16 x 3/4"	1
44	VBS3612-144	Pulley	10” A2	1
45	TS-0209061	Socket Head Cap Screw	3/8”-16 x 1-1/4”	9
46	VBS3612-146	Lever Knob		1
47	BB-6008	Ball Bearing	6008	1
48	BB-6206	Ball Bearing	6206	1
49	BB-6304	Ball Bearing	6304	1
49A	VBS3612-149A	Work Table		1
50	VBS3612-150	Table Support Frame		1
51	TS-0060071	Hex Cap Screw	3/8”-16 x 1-1/2”	4
52	VBS3612-152	Table Support Housing		1
53	5513572	Socket Head Cap Screw doesn’t match SAP	1/2"-12 x 2”	4
54	TS-0720111	Lock Washer	1/2"	8
55	TS-0680061	Flat Washer	1/2"	8

Index No.	Part No.	Description	Size	Qty
56	TS-0561021	Hex Nut	5/16”-18	4
57	VBS1220M-110	Guide Support Housing		1
58	TS-0208061	Socket Head Cap Screw	5/16”-18 x 1"	4
59	TS-0720081	Lock Washer	5/16"	34
60	TS-0680031	Flat Washer	5/16"	31
61	TS-1503061	Socket Head Cap Screw	M6 x 25	2
62	VBS3612-162	Right-Handed Screw	1/4 x 1"	1
63	TS-0207061	Socket Head Cap Screw	1/4-20 x 1”	2
64	VBS3612-164	Left-Handed Screw		1
65	VBS3612-165	Slider		1
66	VBS3612-166	Table Tilt Adjust Screw		1
67	VBS3612-167	Auxiliary Table		1
68	VBS3612-168	Auxiliary Table Support Frame		1
69	VBS3612-169	Table Bracket		2
70	TS-0209061	Socket Head Cap Screw	3/8”-16 x 1-1/4”	4
71	TS-0209081	Socket Head Cap Screw	3/8”-16 x 1-3/4”	4
72	VBS3612-172	Bracket		1
73	TS-0561031	Hex Nut	3/8"-16	4
74	VBS3612-174	Adjust Screw		2
75	VBS3612-175	Miter Gauge		1
76	TS-0208071	Socket Head Cap Screw	5/16”-18 x 1-1/4”	3
77	TS-1503021	Socket Head Cap Screw	M6 x 10	8
78	TS-1534032	Phillips Pan Head Machine Screw	M5 x 8	1
79	TS-2361051	Lock Washer	M5	19
80	VBS2012-1550	Rip Fence		1
81	VBS3612-181	Circle Cutting Attachment		1
82	TS-0208061	Socket Head Cap Screw	5/16”-18 x 1"	2
83	VBS3612-183	Hex Cap Screw	1/4"-20 x 2-3/4”	1
84	VBS3612-184	Holding Jaw		1
85	VBS3612-185	Feed Screw		1
86	VBS3612-186	Magnifying Glass		1
87	TS-1533032	Phillips Pan Head Machine Screw	M5 x 10	2
88	TS-1550031	Flat Washer	M5	2
89	VBS3612-189	Blade Guide Support		1
90	VBS3612-190	Blade Guide Support		1
91	VBS16-132	Blade Guides		4
92	TS-1503061	Socket Head Cap Screw	M6 x 25	4
93	TS-1551041	Lock Washer	M6	10
94	TS-1550041	Flat Washer	M6	4
95	VBS3612-195	Blade Stopper		1
96	VBS3612-196	Blade Stopper		1
97	VBS2012-1350	Blade Guide Post		1
98	VBS2012-1351	Gear Rack		1
99	TS-0206022	Socket Head Cap Screw	10-24 x 1/2"	3
100	VBS2012-1360	Guide Post Housing		1
101	VBS3612-1101	Blade Guard, Left		1
102	VBS3612-1102	Blade Guard, Right		1
103	VBS2012-1400	Spring		2
104	VBS2012-1410	Spring Locker		1
105	TS-0207071	Socket Head Cap Screw	1/4”-20 x 1-1/4"	2
106	VBS3612-1106	Post Housing Spring		1
107	VBS2012-1450	Post Elevating Gear		1
108	TS-1550071	Flat Washer	M10	1
109	TS-1540071	Hex Nut	M10	2
110	VBS3612-1110	Guide Post Locker		1
111	VBS3612-1111	Handwheel		1
112	TS-0270051	Socket Set Screw	5/16”-18 x 1/2"	1
113	VBS3612-1113	Handwheel Knob		1
114	VBS3612-1114	Main Drive Motor		1

Index No.	Part No.	Description	Size	Qty
115	TS-0051051	Hex Cap Screw	5/16”-18 x 1"	8
116	VBS3612-1116	Motor Pulley	4-1/8” A3	1
117	VB-A44	V-Belt	2010+7070	2
118	VB-A50	V-Belt	7300+7071	2
119	BA62	V-Belt	2010+4450	1
120	VBS2012-BV875	V-Belt	7020+7220	1
121	VBS1220A-301	Lower Wheel		1
122	VBS1220A-302	Rubber Tire		2
123	VBS3612-1123	Rubber Tire		1
124	VBS2012-3030	Tapered Sleeve		1
125	VBS2012-3040	Wheel Locking Nut		1
126	VBS1220A-305	Upper Wheel		1
127	VBS3612-1127	Auxiliary Wheel		1
128	VBS2012-3060	Upper Wheel Lock		2
129	VBS2012-3070	Upper Wheel Nut		1
130	VBS2012-3080CP	Slide Block Housing		1
131	TS-0209051	Socket Head Cap Screw	3/8”-16 x 1”	10
132	VBS3612-1132	Auxiliary Wheel Shaft		1
133	TS-0271071	Socket Set Screw	3/8”-16 x 3/4"	4
134	VBS2012-3090	Slide Block Seat		1
135	VBS2012-3100	Slide Block Guide		2
136	TS-0209071	Socket Head Cap Screw	3/8”-16 x 1-1/2”	4
137	VBS2012-3110	Upper Wheel Slider		1
138	TS-0267041	Socket Set Screw	1/4"-20 x 3/8"	4
139	VBS2012-3111	Slider Cover		1
140	VBS2012-3112	Slider Screw Shaft		1
141	VBS2012-3113	Slider Pin		1
142	VBS2012-3120	Wheel Elevation Shaft		1
143	VBS2012-3121	Spring		1
144	VBS2012-3150	Washer		1
145	VBS2012-3180	Indicator Rings		3
146	VBS2012-3190	Tension Indicator		1
147	VBS2012-3200	Wheel Tilt Adjuster		1
148	VBS2012-3220	Wheel Tilt Connector		1
149	VBS2012-3240	Connector Washer		1
150	VBS3612-1150	Connector Housing		1
151	TS-1504041	Socket Head Cap Screw	M8 x 20	3
152	VBS2012-9030	Handwheel		1
153	TS-0208031	Socket Head Cap Screw	5/16”-18 x 5/8"	2
154	VBS3612-1154	Wheel Tilt Knob		1
155	G6205	Ball Bearing	6205	2
156	BB-6305	Ball Bearing	6305	2
157	VBS3612-1157	Air Pump Suspension Arm		2
158	TS-0081031	Hex Cap Screw	5/16”-18 x 3/4"	4
159	VBS2012-4170	Air Nozzle		1
160	VBS2012-4180	Air Nozzle Clip		1
161	VBS3612-1161	Air Compressor		1
162	VBS3612-1162	Main Body		1
163	VBS3612-1163	Rear Door, Right		1
164	VBS3612-1164	Rear Door, Left		1
165	TS-1533032	Pan Head Screw	M5 x 10	14
166	VBS3612-1166	Front Lower Door		1
167	VBS3612-1167	Front Upper Door, Right		1
168	VBS3612-1168	Front Upper Door, Left		1
169	VBS3612-1169	Upper Door Hinge		4
170	TS-1533032	Phillips Pan Head Machine Screw	M5 x 10	12
171	TS-1540031	Hex Nut	M5	10
172	TS-1533052	Phillips Pan Head Machine Screw	M5 x 16	8
173	VBS3612-1173	Hinge		6

Index No.	Part No.	Description	Size	Qty
174	VBS3612-1174	Spring Plate		6
175	VBS3612-1175	Handle Arm		3
176	TS-1534052	Phillips Pan Head Machine Screw	M6 x 16	6
177	TS-1540041	Hex Nut	M6	6
178	9600	Chip Stopper		1
179	TS-2288202	Philllips Pan Head Machine Screw	M8 x 12	3
180	VBS3612-1180	Pointer		1
181	VBS2012-9780	Brush Bracket		1
182	TS-2361081	Lock Washer	M8	1
183	TS-0050031	Hex Cap Screw	1/4"-20 x 3/4"	1
184	VBS2012-9790	Chip Brush		1
185	VBS3612-1185	Eye Bolt		1
186	VBS2012-6600	Push button, On		1
187	VBS2012-6602	Push button, Off		1
188	VBS2012-6610	Emergency Stop Switch		1
189	VBS3612-1189	Limit Switch		3
190	VBS2012-6650	Key Switch		1
191	VBS3612-1191	Main Switch		1
192	TS-2284301	Phillips Flat Head Machine Screw	M4 x 20	2
193	VBS3612-1193	Contactor		1
194	TS-1532052	Phillips Pan Head Machine Screw	M4 x 15	8
195	VBS3612-1195	Overload Relay		1
196	VBS2012-6742	Pilot Light, Green (Power)		1
197	VBS3612-1197	Voltage Reducer		1
198	TS-2284082	Phillips Pan Head Machine Screw	M4 x 8	16
199	VBS3612-1199	Fuse Block		3
200	TS-1534052	Phillips Pan Head Machine Screw	M6 x 15	3
201	VBS3612-1201	Fuse Holder		2
202	VBS3612-1202	Fuse Holder		1
203	VBS3612-1203	Wire Housing		3
204	VBS3612-1204	Ground Seat		1
205	VBS3612-1205	Electrical Box		1
206	TS-1502081	Socket Head Cap Screw	M5 x 35	2
207	VBS3612-1207	Wiring Plate		1
208	TS-0810012	Round Head Screw	10-24 x 1/4"	4
209	VBS3612-1209	Wiring Duct		1
210	VBS3612-1210	Control Plate		1
211	VBS3612-1211	Copper Pan Head Screw	M4 x 10	6
212	VBS2012-8712	Indicator Plate		1
213	VBS2012-8372	Variator Instruction		1
214	VBS2012-8422	Gear Box Instruction		1
215	VBS3612-1215	Tilt Indicator Scale		1
216	VBS2012-7000CP	Motor Spring Housing		1
217	TS-0051061	Hex Cap Screw	5/16”-18 x 1-1/4"	16
218	VBS2012-7010	Spring		1
219	VBS3612-1219	Variator Disk, Upper Outer		1
220	TS-0208041	Socket Head Cap Screw	5/16”-18 x 3/4"	3
221	VBS2012-7030	Variator Disk, Upper Inner		1
222	VBS2012-7040	Variator Housing Tube		1
223	VBS3612-1223	Variator Disk Shaft		1
224	TS-1501051	Socket Head Cap Screw	M4 x 16	3
225	VBS3612-1225	Key	6 x 80mm	1
226	VBS2012-7060	Variator Housing		1
227	VBS3612-1227	Retaining Ring	16	1
228	VBS3612-1228	Pulley	9” A2	1
229	TS-0209051	Socket Head Cap Screw	3/8”-16 x 1"	1
230	VBS2012-7080	Worm Gear		1
231	TS-0207031	Socket Head Cap Screw	1/4”-20 x 5/8"	1
232	VBS2012-7090	Worm Gear Housing		1

Index No.	Part No.	Description	Size	Qty
233	TS-0267061	Set Screw	1/4"-20 x 5/8"	4
234	VBS2012-7100	Gear Shaft		1
235	VBS2012-7110	Worm		1
236	TS-0267041	Socket Set Screw	1/4"-20 x 3/8"	1
237	VBS2012-7120	Arm		1
238	VBS2012-7190	Screw Nut		1
239	BB-6007	Ball Bearing	6007	2
240	VBS2012-7200	Spring Housing		1
241	VBS2012-721	Spring		1
242	VBS2012-7220	Variator Disk, Lower Outer		1
243	VBS2012-7230	Variator Disk, Lower Inner		1
244	VBS2012-7250	Variator Shaft		1
245	VBS3612-1245	Key	6 X 60mm	1
246	VBS3612-1246	Shaft Housing		1
247	VBS2012-7290	Spacer		1
248	VBS3612-1248	Socket Head Cap Screw	10-24 x 5/8"	3
249	VBS3612-1249	Pulley	4-1/8” A2	1
250	VBS3612-1250	Speed Readout Detector		1
251	VBS1220M-661	Digital Tachometer		1
252	BB-6204	Ball Bearing	6204	1
253	TS-1502021	Socket Head Cap Screw	M5 x 10	1
254	TS-1524041	Socket Set Screw	M8 x 16	1
255	BB-6303	Ball Bearing	6303	1

VBS-3612 Band Saw

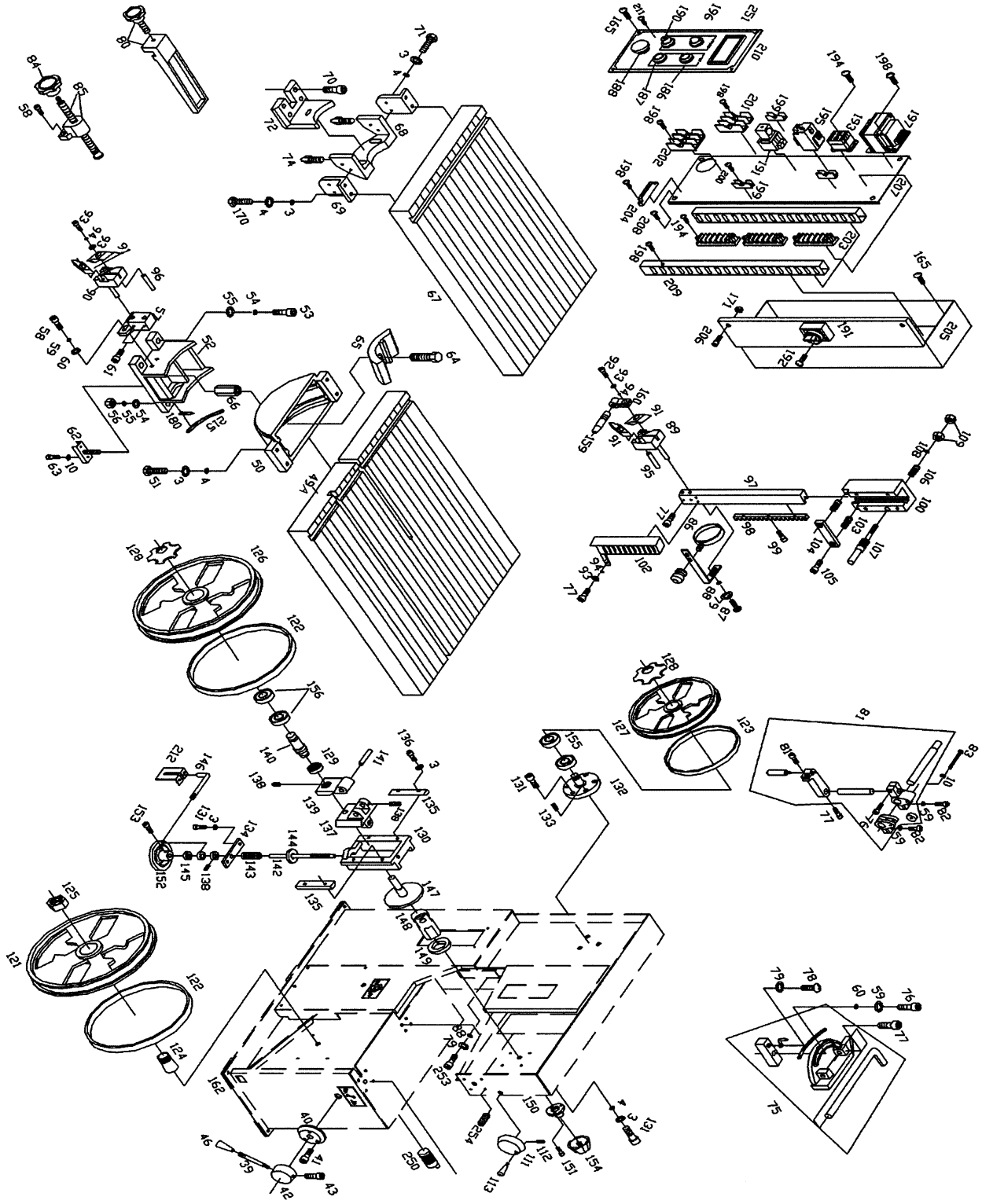

VBS-3612 Band Saw

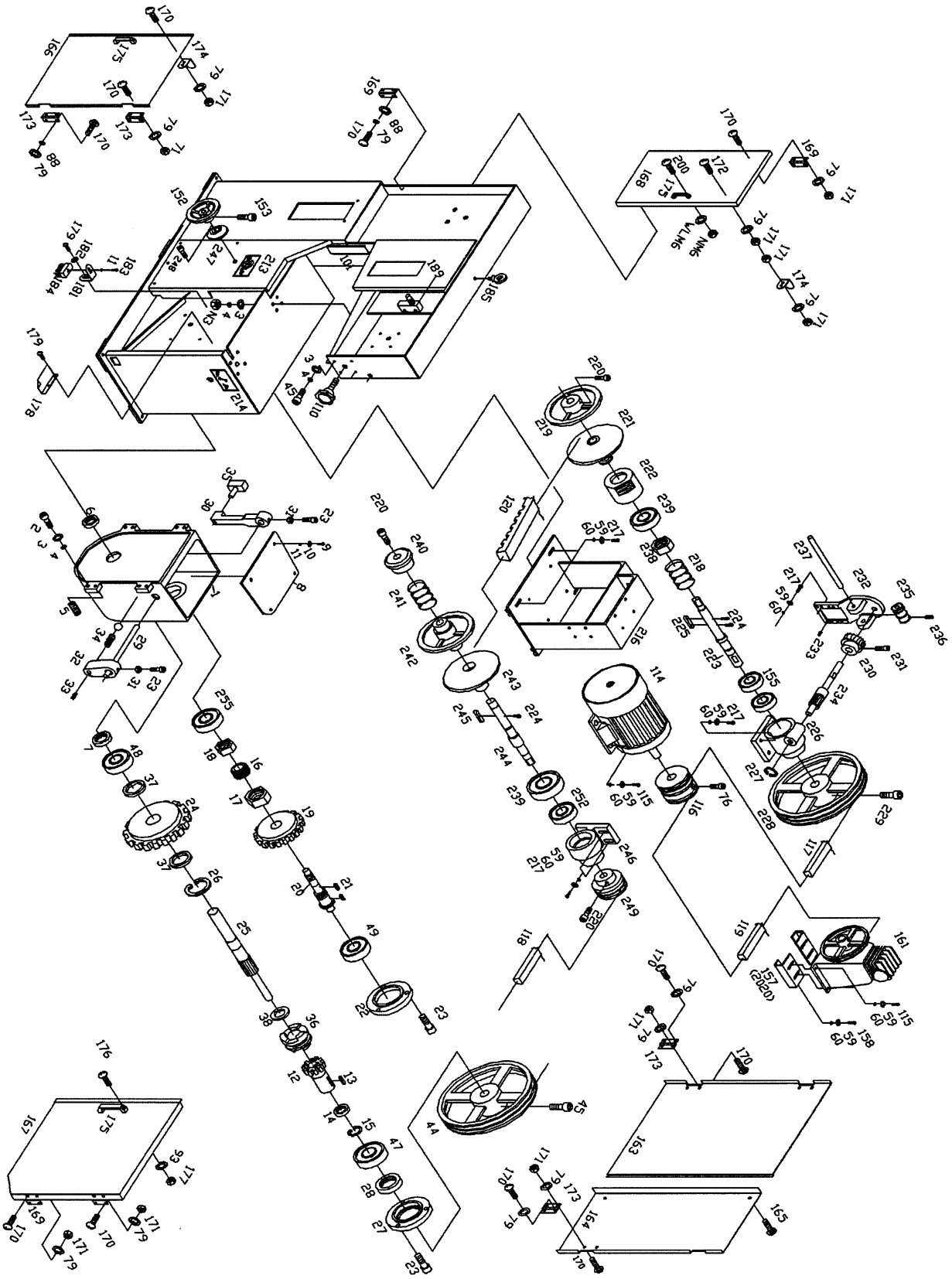

Parts List: Welder, Shear and Work Lamp Assemblies

(refer to breakdown on page 39)

Index No.	Part No.	Description	Size	Qty
1	JWG34-601	Limit Switch		1
2	PR-EV-6011	Insulator		1
3	VBS3612-203	Pan Head Bolt	1/8”-32 x 5/8"	2
4	TS-0720051	Lock Washer	1/8"	2
5	PR-EV-6020	Guide Block		1
6	TS-1502061	Socket Head Cap Screw	M5 x 25	2
7	TS-1551031	Lock Washer	M5	2
8	PR-EV-6021	Spring Bracket		1
9	TS-1533032	Phillips Pan Head Machine Screw	M5 x 8	2
10	PR-EV-6030	Guide Casting		1
11	TS-1534041	Flat Head Screw	M5 x 10	4
12	PR-EV-6040	Housing		1
13	TS-1533052	Phillips Pan Head Machine Screw	M5 x 16	6
14	PR-EV-6050	Stationary Jaw		1
15	TS-1502051	Socket Head Cap Screw	M5 x 20	3
16	PR-EV-6051	Insulator		1
17	PR-EV-6052	Insulating Tubes		3
18	PR-EV-6053	Washer, Insulate		3
19	PR-EV-6054	Spacers		3
20	PR-EV-6060	Eccentric Shafts		2
21	PR-EV-6070	Clamp Lever, Right		1
22	TS-1335052	Round Head Screw	5/16”-18 x 3/4"	2
23	TS-0561021	Hex Nut	5/16"-18	2
24	PR-EV-6071	Clamp Lever, Left		1
25	PR-EV-6100	Clamp Support, Right		1
26	PR-EV-6101	Clamp Support, Left		1
27	PR-EV-6110	Clamp Plate, Right		1
28	TS-1533032	Phillips Pan Head Machine Screw	M5 x 8	4
29	TS-1551031	Lock Washer	M5	2
30	PR-EV-6111	Clamp Plate, Left		1
31	PR-EV-6120	Retaining Ring (Re7)		2
32	PR-EV-6130	Moving Jaw		1
33	TS-1502031	Socket Head Cap Screw	M5 x 12	2
34	JWG34-615	Weld Button		1
36	PR-EV-6170	Pressure Adjust Knob		1
37	PR-EV-6180	Shaft		1
38	TS-0720071	Lock Washer	1/4"	5
39	TS-0680021	Flat Washer	1/4"	5
40	TS-0561011	Hex Nut	1/4"-20	3
41	PR-EV-6200	Cam		1
42	PR-EV-6210	Weld Tension Arm		1
43	TS-081F052	Phillips Pan Head Machine Screw	1/4"-20 x 5/8"	1
44	PR-EV-6211	Bushing		1
45	PR-EV-6220	Spring, Short		1
46	PR-EV-6230	Spring, Long		1
47	VBS3612-247	Pan Head Screw	M5 x 25	1
48	TS-1540031	Hex Nut	M5	1
49	VBS1220M-624	Transformer		1
50	VBS3612-250	Copper Pan Head Screw	10-24 x 3/8"	2
51	TS-1551031	Lock Washer	3/16"	2
52	PR-HV-6241	Mounting Bracket		1
53	TS-1534041	Flat Head Screw	M5 x 12	10
54	TS-0050171	Hex Cap Screw	1/4"-20 x 4"	2
55	PR-EV-6250	Switch		1
56	PR-EV-6260	Grinder Motor		1
57	PR-EV-6270	Spacer	M6	1

Index No.	Part No.	Description	Size	Qty
58	PR-EV-6280	Grinder Wheel		1
59	TS-0680021	Flat Washer	M6	1
60	TS-1540041	Hex Nut	M6	1
61	VBS1220M-629	Grinder Guard		1
62	PR-EV-6291	Grinder Cover		1
63	JWG34-633	Welder Name Plate		1
65	PR-EV-6340	Instruction Label		1
66	PR-EV-6420	Grinder Label		1
67	PR-HV-6420	Anneal Button		1
68	VBS3612-268	Deflector Bracket, Right		1
69	VBS3612-269	Pan Head Screw	M4 x 8	4
70	VBS3612-270	Wood Screw	1/8 X 1/4"	2
71	VBS3612-271	Deflector Bracket, Left		1
72	VBS3612-272	Spark Deflector		1
73	PR-EV-9290	Knobs		2
74	VBS2012-6810	Light Shield		1
75	VBS2012-6820	Shield Jointer		1
76	VBS2012-6830	Brass Nut		2
77	VBS2012-6840	Lamp Arm		1
78	VBS2012-6860	Arm Tubes		2
79	VBS2012-6870	Tube Holder		1
80	VBS2012-6880	Arm Nuts		3
81	VBS2012-6890	Tube Locks		2
82	VBS2012-6900	Arm Housing Adjust		1
83	VBS2012-6910	Housing Adjust Screw		1
84	VBS2012-6920	Lamp Arm Housing		1
85	VBS2012-6930	Holder, Upper	6920	1
86	TS-1502081	Socket Head Bolt	5 X 35mm	2
87	VBS3612-287	Holder, Lower	6290	1
88	VBS2012-6950	Lamp Socket		1
89	VBS3612-289	Washer		2
90	VBS3612-290	Nut		1
91	TS-1550071	Flat Washer	10mm	1
92	VBS3612-292	Rotating Button		1
93	VBS2012-9040	Brass Handwheel		1
94	PR-EV-1910	Spindle Bushings		3
95	TS-0207031	Socket Head Bolt	1/4 X 5/8"	1
96	TS-0207081	Socket Head Bolt	1/4 X 1½"	1
97	PR-EV-1920	Spindle Lift		1
98	VBS3612-298	Retaining Ring	5mm	2
99	PR-EV-1930	Blade Shaft		1
100	VBS3612-2100	Retaining Ring	25mm	2
101	PR-EV-1940	Vaned Iron Plates		2
102	VBS3612-2102	Pan Head Bolt	3/16 X 3/8"	4
103	PR-EV-1950	Lower Blades		2
104	PR-EV-1960	Upper Blade		1
105	PR-EV-1970	Joint Plate, Left		1
106	TS-0208031	Socket Head Bolt	5/16 X 5/8"	2
107	TS-0720081	Lock Washer	5/16"	2
108	PR-EV-1980	Chain Joint, Right		1
109	PR-EV-1990	Handle Bar		1
110	PR-EV-9210	Knob		1

Welder, Shear and Work Lamp Assemblies

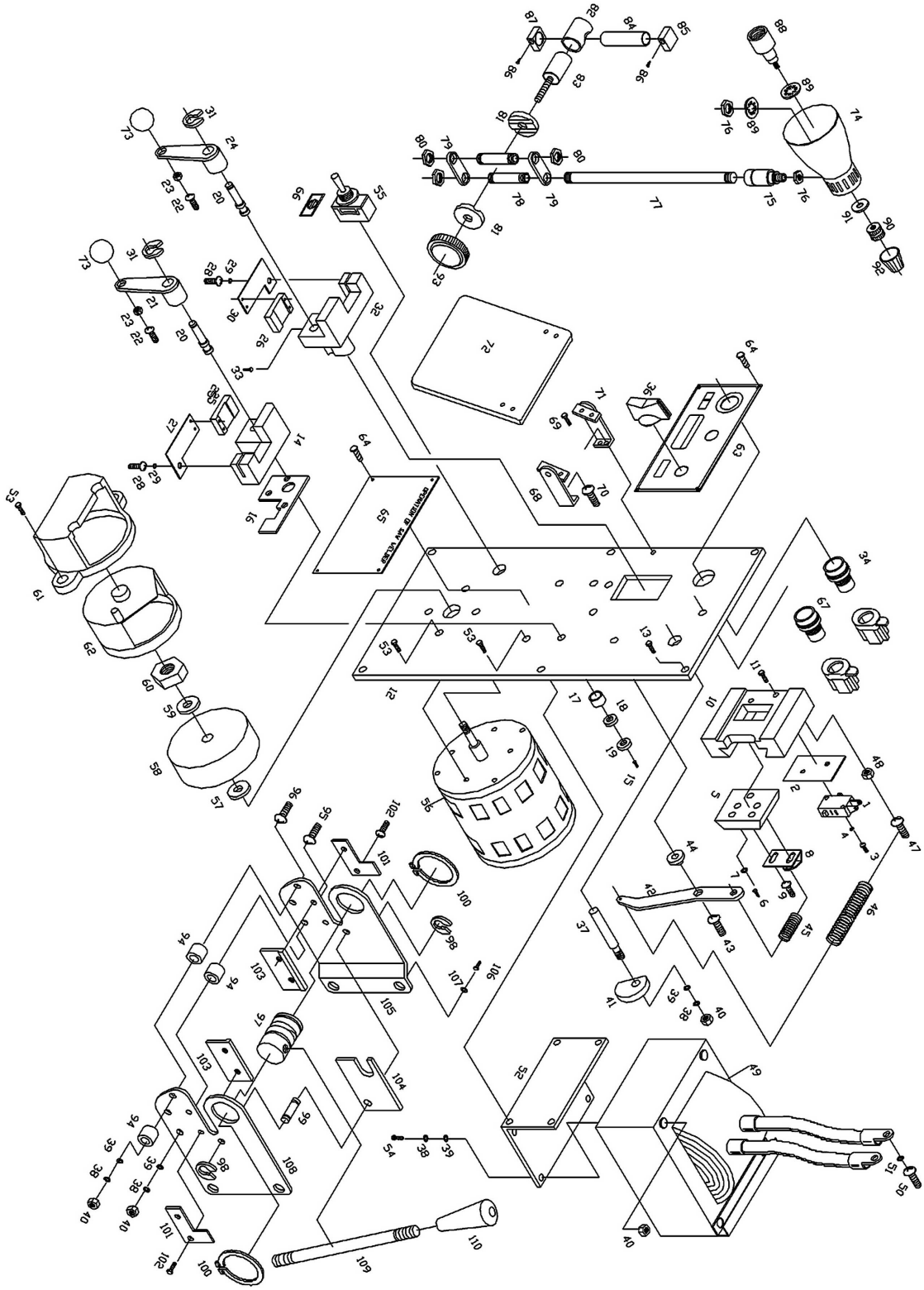

Electrical Connections – 3Ph, 230/460V

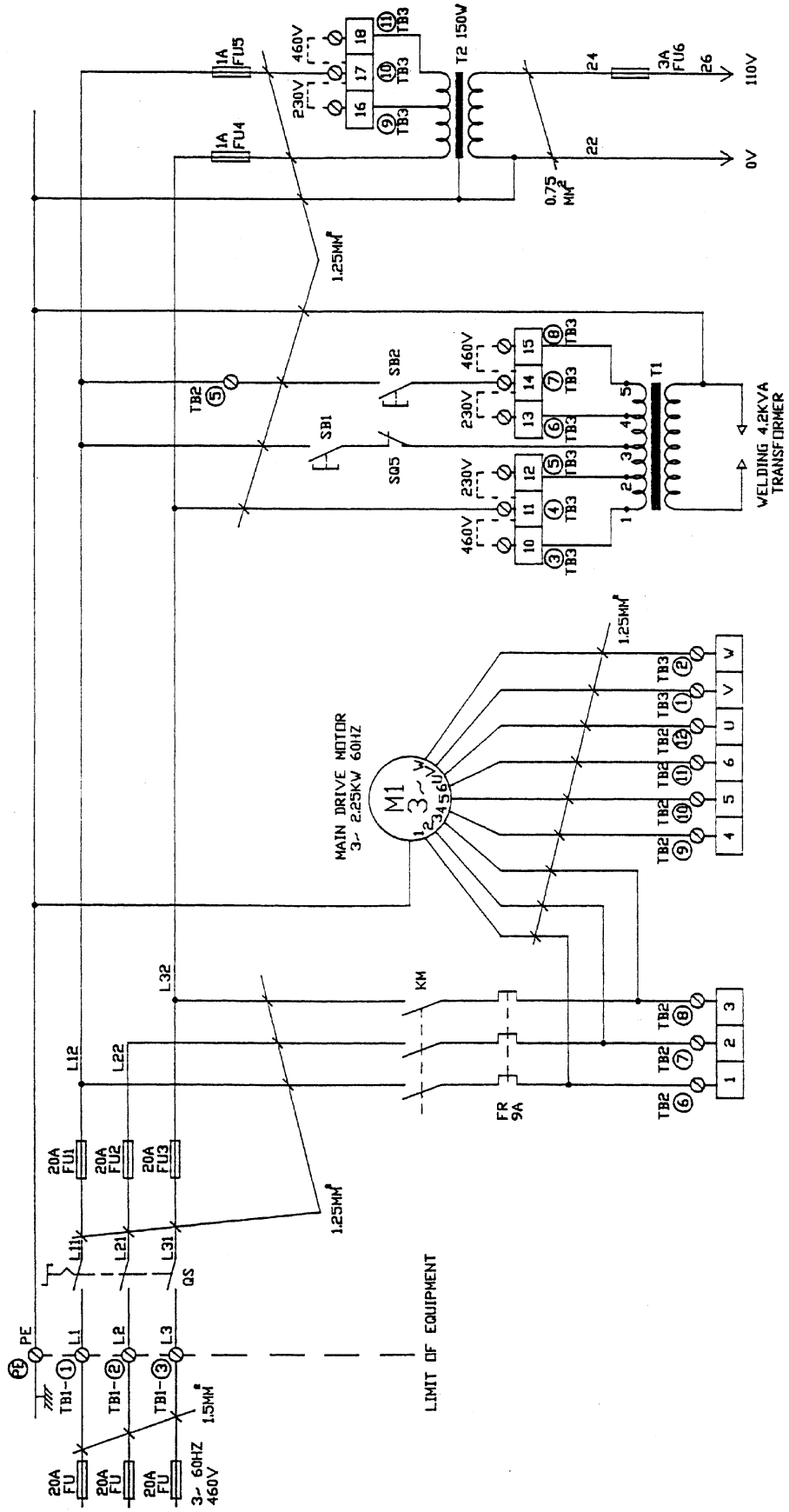

Electrical Connections – 3Ph, 230/460V

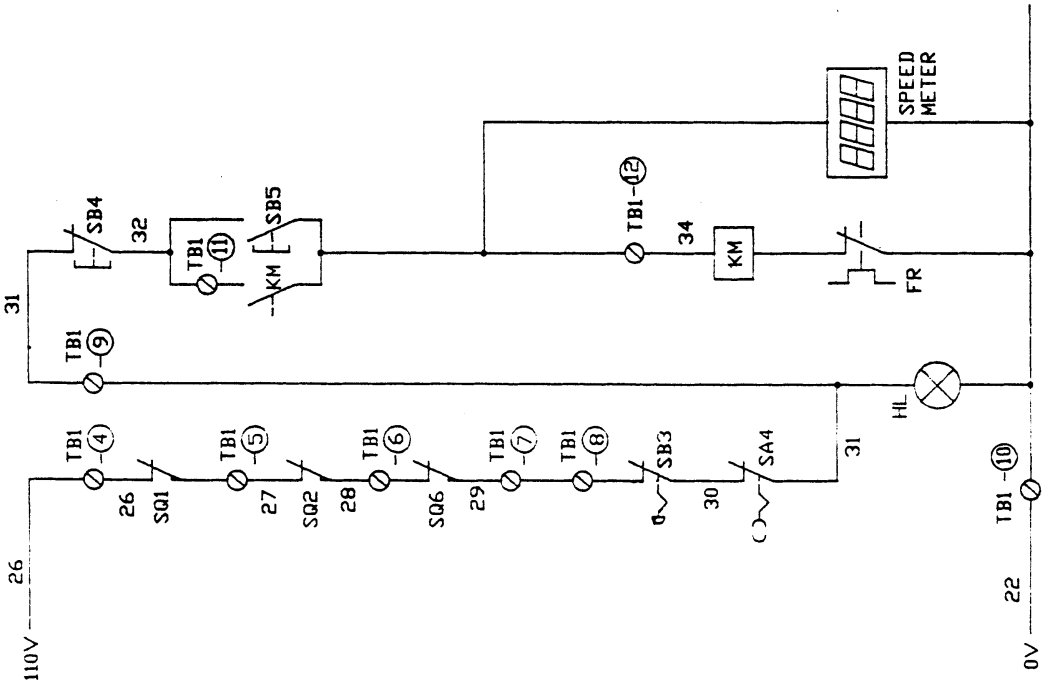

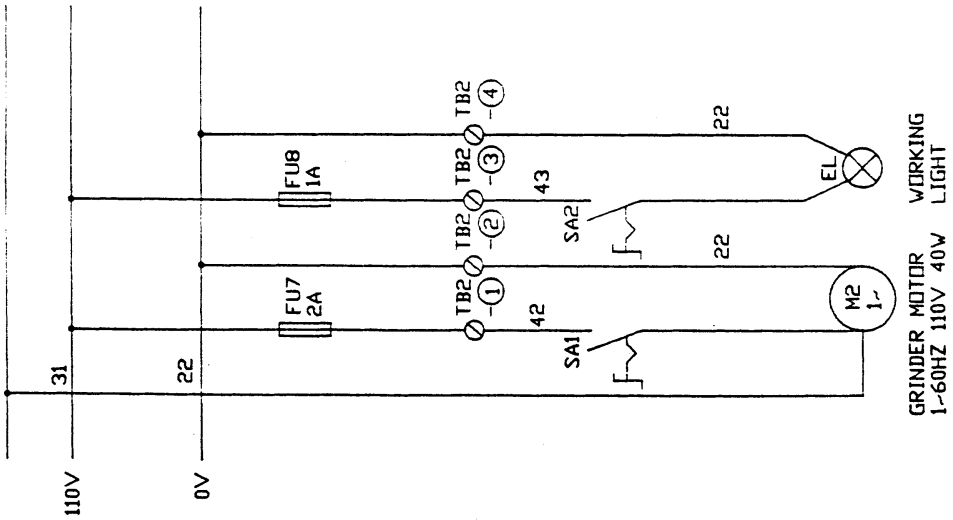

SB1	Weld On (White)	SA4	Key Switch	SQ6	Safety Switch
SB2	Anneal On (Green)	HL	Indicator Light (Green)	KM	Contactor
SB3	Emergency Stop (Red)	EL	Lamp (60W, 115V)	FR	Overload Relay
SB4	Main Motor Off (Red)	QS	General Switch	T2	Transformer
SB5	Main Motor On (Green)	SQ1	Safety Switch		
SA1	Grinder Motor On	SQ2	Safety Switch		
SA2	Work Lamp On (Black)	SQ5	Weld Auto Stop		

Electrical Box

(see page 41 for identification of parts)

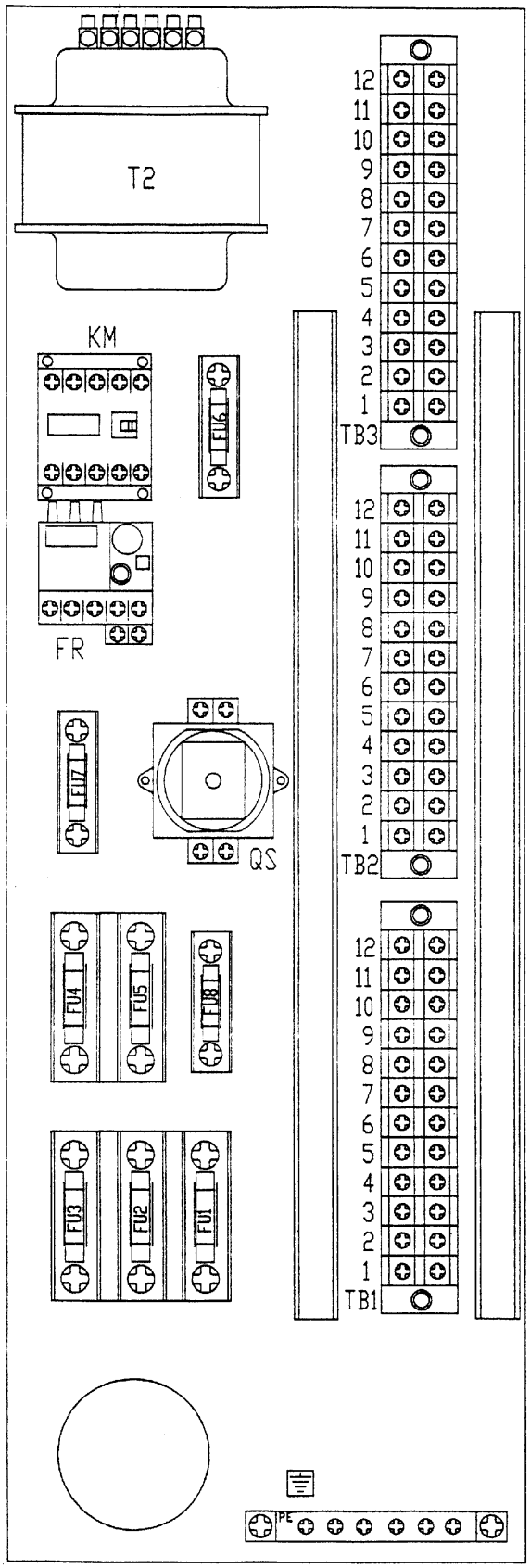

WMH Tool Group
2420 Vantage Drive
Elgin, Illinois 60124
Phone: 800-274-6848
www.wmhtoolgroup.com